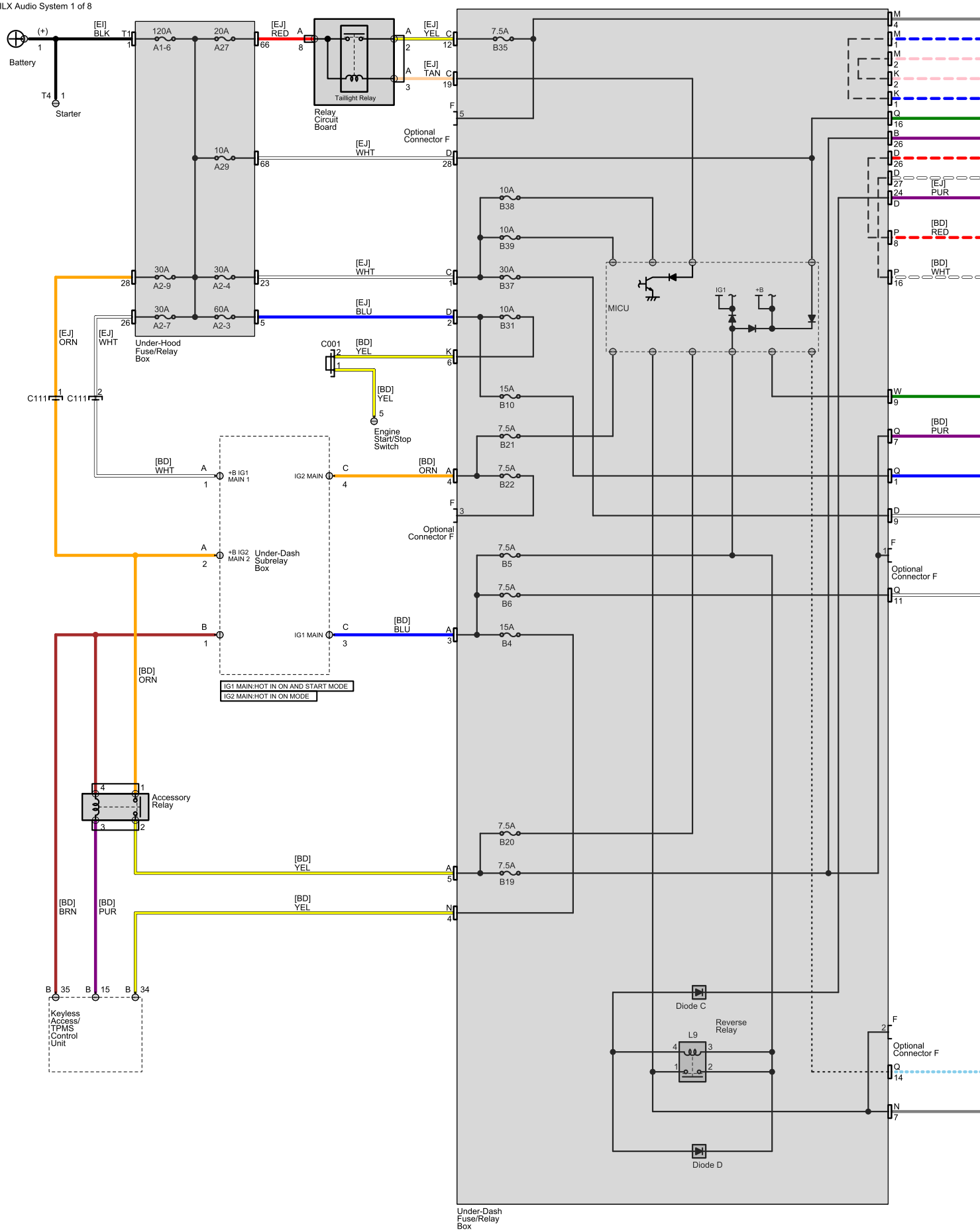
Battery
(+)
[EI] BLK
T1
Starter
T4
120A A1-6
20A A27
10A A29
30A A2-9
30A A2-4
30A A2-7
60A A2-3
Under-Hood Fuse/Relay Box
[EJ] RED
Relay Circuit Board
Taillight Relay
[EJ] YEL
[EJ] TAN
Optional Connector F
[EJ] WHT
[EJ] BLU
[EJ] ORN
C001
[BD] YEL
Engine Start/Stop Switch
C111
[BD] WHT
+B IG1 MAIN 1
IG2 MAIN
[BD] ORN
+B IG2 MAIN 2
Under-Dash Subrelay Box
IG1 MAIN
[BD] BLU
IG1 MAIN:HOT IN ON AND START MODE
IG2 MAIN:HOT IN ON MODE
Accessory Relay
[BD] BRN
[BD] PUR
Keyless Access/ TPMS Control Unit
7.5A B35
10A B38
10A B39
30A B37
10A B31
15A B10
7.5A B21
7.5A B22
7.5A B5
7.5A B6
15A B4
7.5A B20
7.5A B19
MICU
IG1
+B
Diode C
Reverse Relay
L9
Diode D
Under-Dash Fuse/Relay Box
[EJ] PUR
[BD] RED
[BD] WHT
[BD] PUR

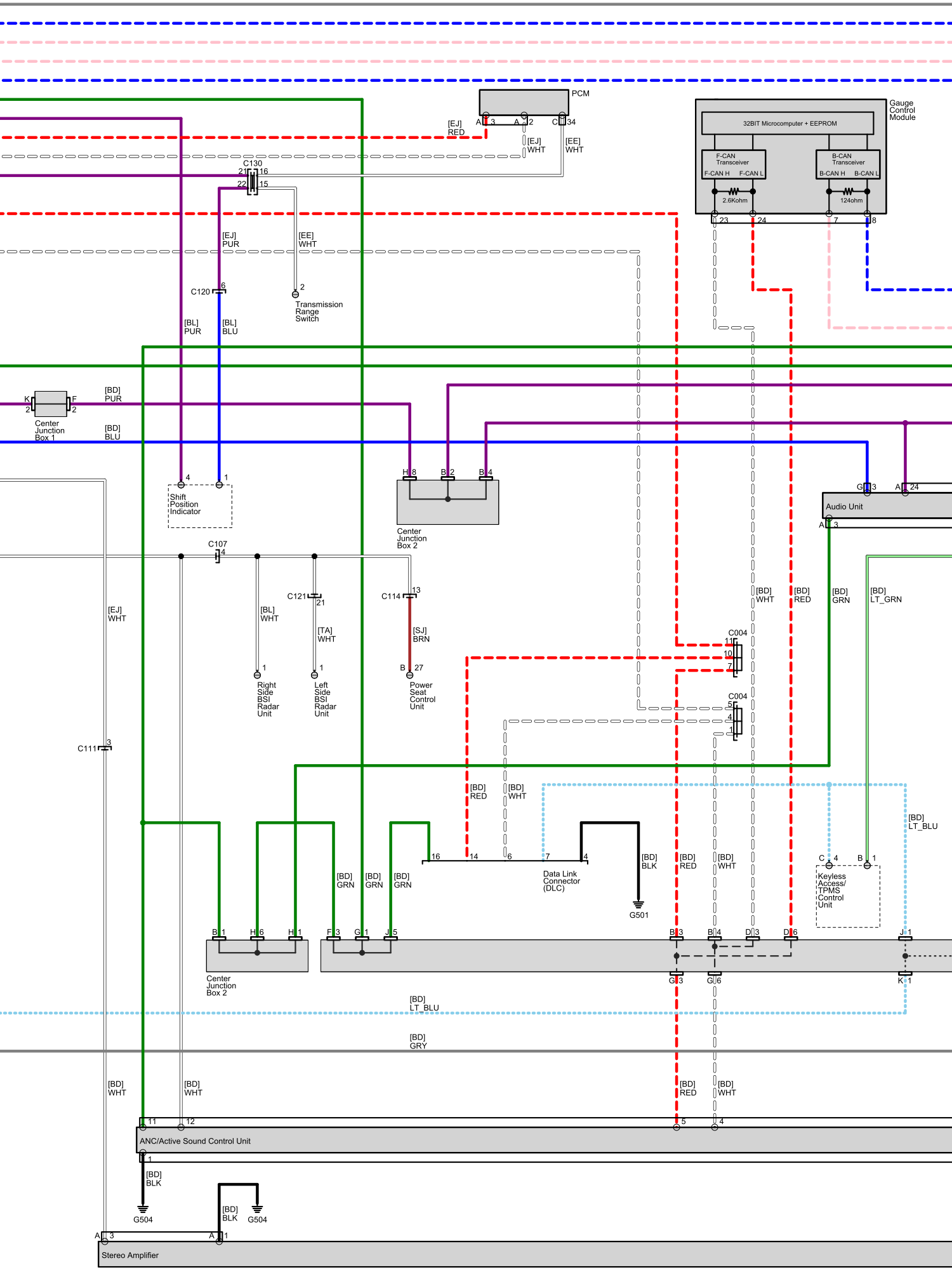
PCM
[EJ] RED
[EJ] WHT
[EE] WHT
Gauge Control Module
32BIT Microcomputer + EEPROM
F-CAN Transceiver
B-CAN Transceiver
F-CAN H
F-CAN L
B-CAN H
B-CAN L
2.6Kohm
124ohm
C130
[EJ] PUR
[EE] WHT
C120
Transmission Range Switch
[BL] PUR
[BL] BLU
[BD] PUR
[BD] BLU
Center Junction Box 1
Shift Position Indicator
Center Junction Box 2
Audio Unit
C107
C121
C114
[EJ] WHT
[BL] WHT
[TA] WHT
[SJ] BRN
Right Side BSI Radar Unit
Left Side BSI Radar Unit
Power Seat Control Unit
C004
C111
[BD] WHT
[BD] RED
[BD] GRN
[BD] LT_GRN
[BD] LT_BLU
[BD] BLK
Data Link Connector (DLC)
G501
Keyless Access/ TPMS Control Unit
[BD] GRY
ANC/Active Sound Control Unit
G504
Stereo Amplifier

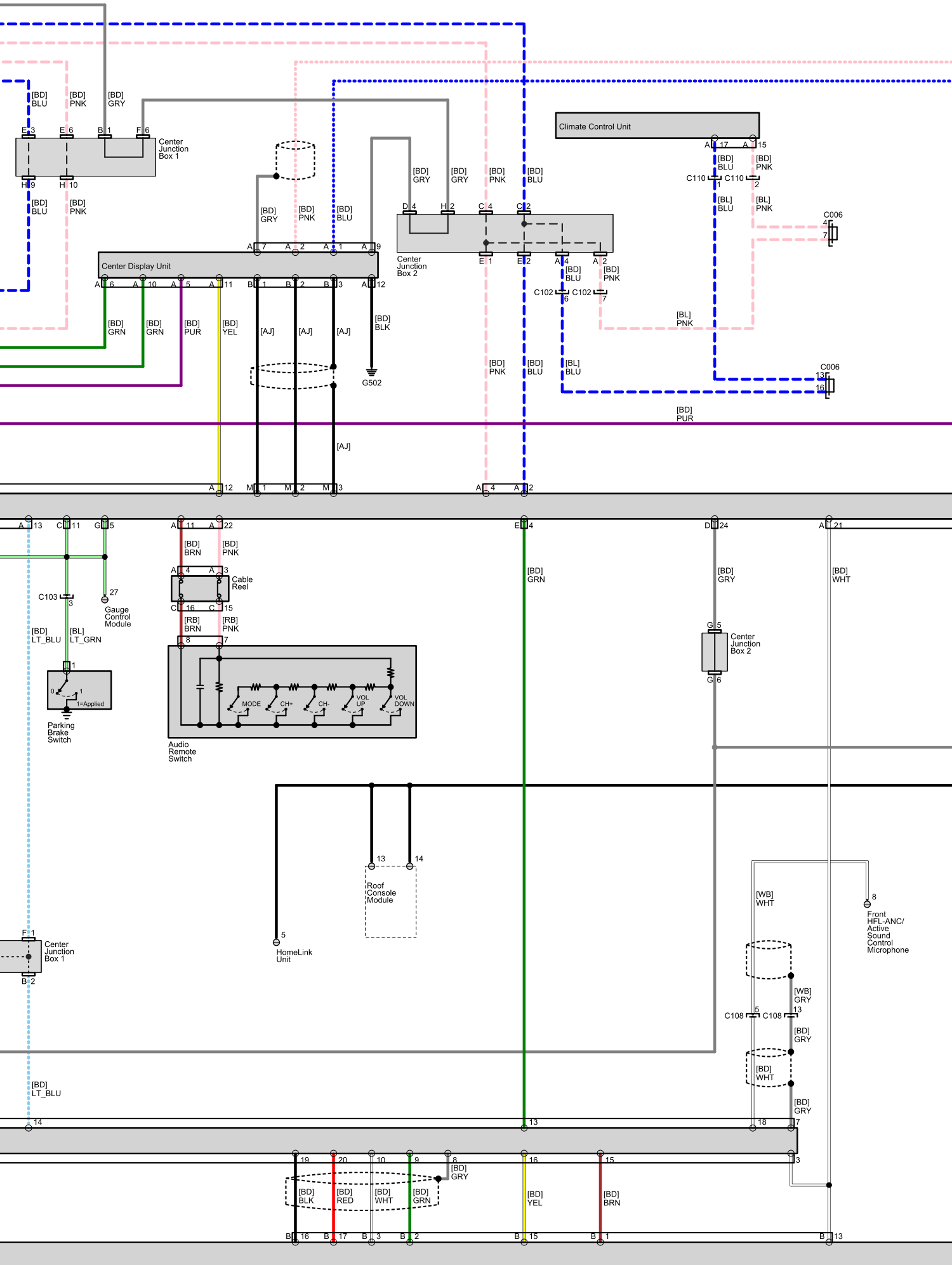
Center Junction Box 1
Center Display Unit
Climate Control Unit
Center Junction Box 2
C006
G502
Cable Reel
Gauge Control Module
Parking Brake Switch
1=Applied
Audio Remote Switch
MODE
CH+
CH-
VOL UP
VOL DOWN
Roof Console Module
HomeLink Unit
Front HFL-ANC/ Active Sound Control Microphone
C103
C102
C110
C108
[BD] BLU
[BD] PNK
[BD] GRY
[BD] GRN
[BD] PUR
[BD] YEL
[AJ]
[BD] BLK
[BL] BLU
[BL] PNK
[BD] BRN
[RB] BRN
[RB] PNK
[BD] LT_BLU
[BL] LT_GRN
[BD] WHT
[WB] WHT
[WB] GRY
[BD] RED
[BD] WHT
[BD] YEL
[BD] BRN

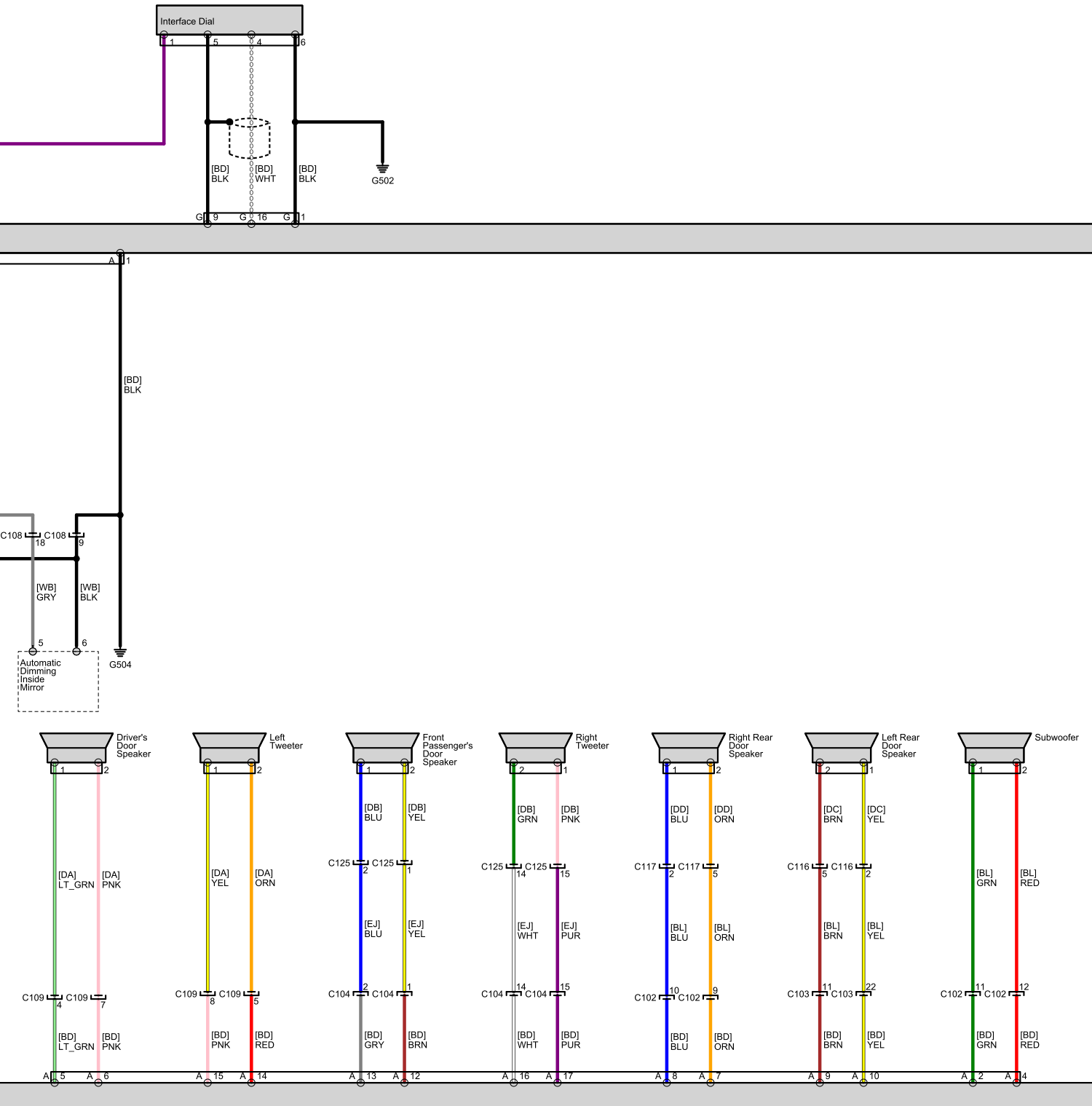
Interface Dial
1
5
4
6
[BD]
BLK
[BD]
WHT
[BD]
BLK
G502
G 9
G 16
G 1
A 1
[BD]
BLK
C108 18
C108 9
[WB]
GRY
[WB]
BLK
5
6
Automatic
Dimming
Inside
Mirror
G504
Driver's
Door
Speaker
Left
Tweeter
Front
Passenger's
Door
Speaker
Right
Tweeter
Right Rear
Door
Speaker
Left Rear
Door
Speaker
Subwoofer
[DA]
LT_GRN
[DA]
PNK
[DA]
YEL
[DA]
ORN
[DB]
BLU
[DB]
YEL
[DB]
GRN
[DB]
PNK
[DD]
BLU
[DD]
ORN
[DC]
BRN
[DC]
YEL
[BL]
GRN
[BL]
RED
C125 2
C125 1
C125 14
C125 15
C117 2
C117 5
C116 5
C116 2
[EJ]
BLU
[EJ]
YEL
[EJ]
WHT
[EJ]
PUR
[BL]
BLU
[BL]
ORN
[BL]
BRN
[BL]
YEL
C109 4
C109 7
C109 8
C109 5
C104 2
C104 1
C104 14
C104 15
C102 10
C102 9
C103 11
C103 22
C102 11
C102 12
[BD]
LT_GRN
[BD]
PNK
[BD]
PNK
[BD]
RED
[BD]
GRY
[BD]
BRN
[BD]
WHT
[BD]
PUR
[BD]
BLU
[BD]
ORN
[BD]
BRN
[BD]
YEL
[BD]
GRN
[BD]
RED
A 5
A 6
A 15
A 14
A 13
A 12
A 16
A 17
A 8
A 7
A 9
A 10
A 2
A 4

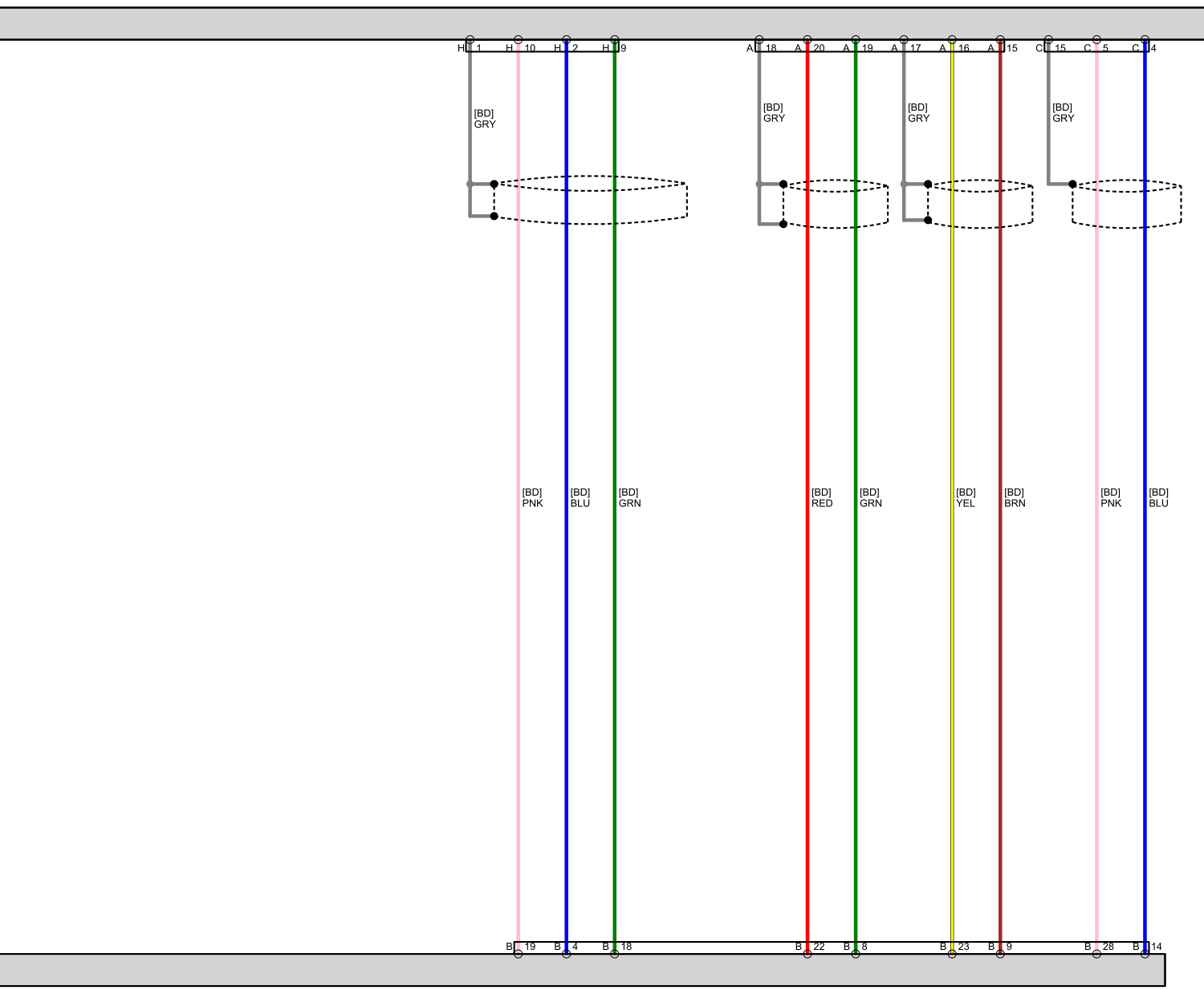
H 1
H 10
H 2
H 9
[BD] GRY
[BD] PNK
[BD] BLU
[BD] GRN
A 18
A 20
A 19
A 17
A 16
A 15
[BD] GRY
[BD] RED
[BD] GRN
[BD] GRY
[BD] YEL
[BD] BRN
C 15
C 5
C 14
[BD] GRY
[BD] PNK
[BD] BLU
B 19
B 4
B 18
B 22
B 8
B 23
B 9
B 28
B 14

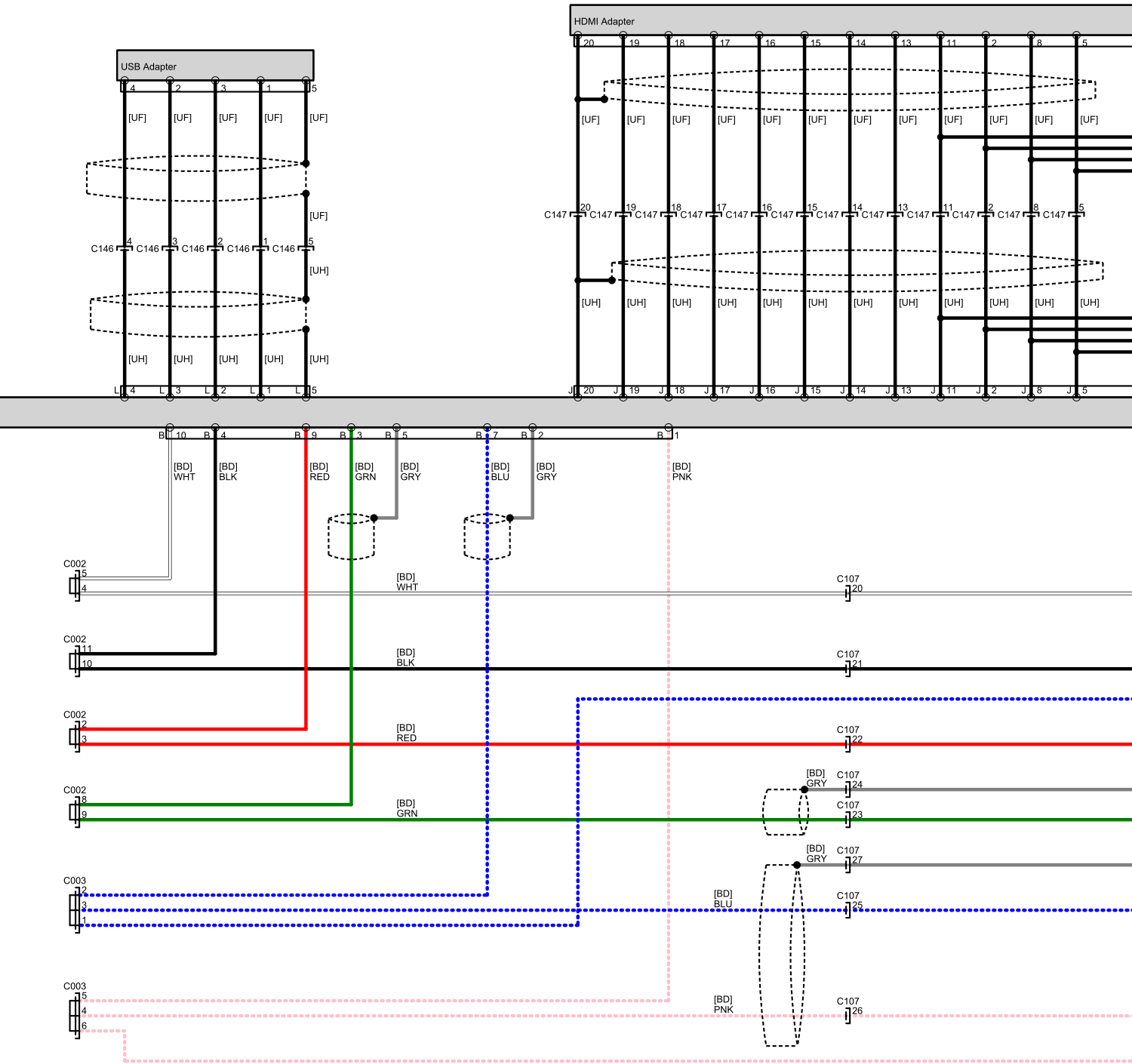
USB Adapter
HDMI Adapter
C146
C147
C002
C003
C107
[UF]
[UH]
[BD] WHT
[BD] BLK
[BD] RED
[BD] GRN
[BD] GRY
[BD] BLU
[BD] PNK

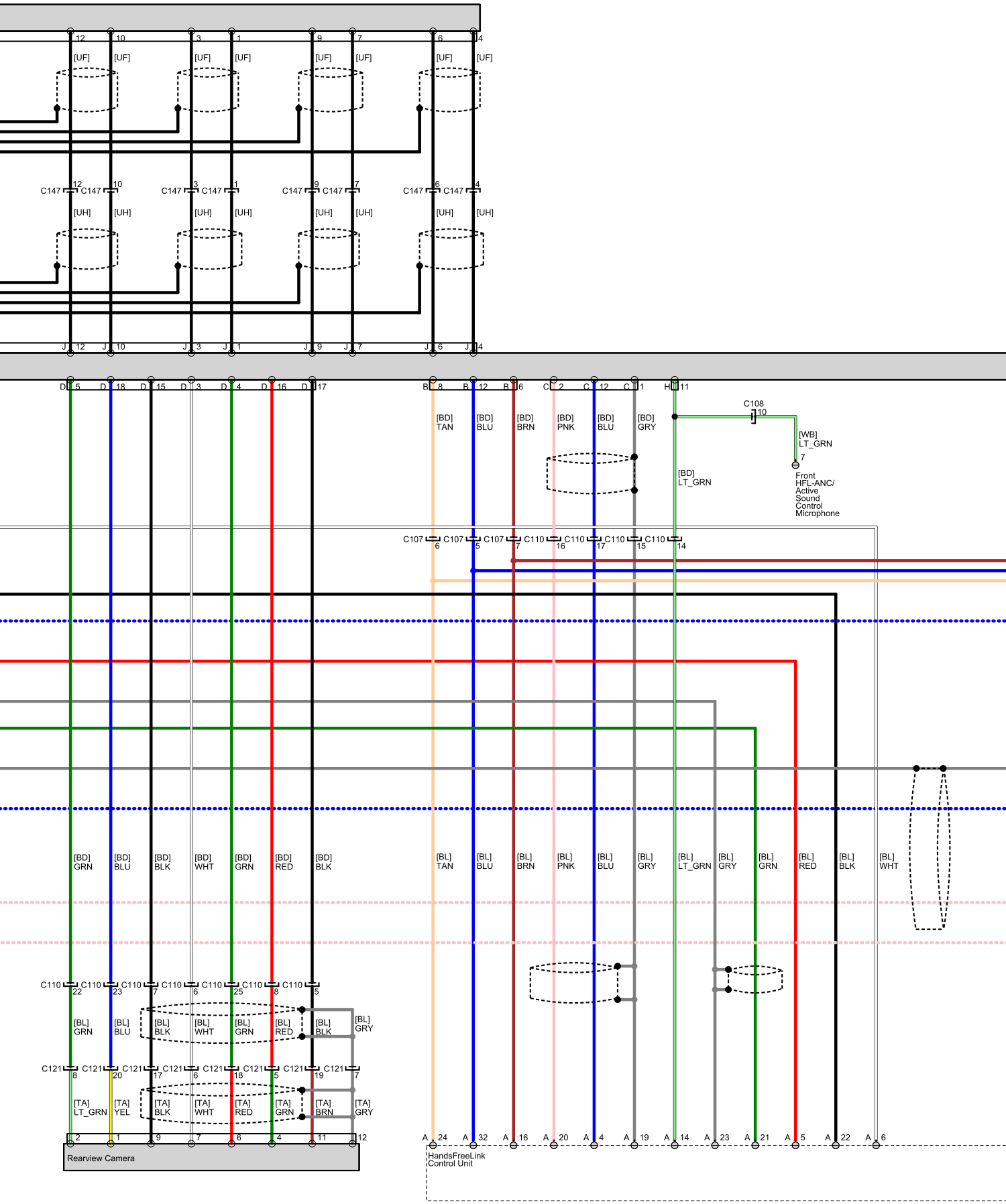
C147
[UF]
[UH]
J 12
J 10
J 3
J 1
J 9
J 7
J 6
J 4
D 5
D 18
D 15
D 3
D 4
D 16
D 17
B 8
B 12
B 6
C 2
C 12
C 1
H 11
[BD] TAN
[BD] BLU
[BD] BRN
[BD] PNK
[BD] BLU
[BD] GRY
[BD] LT_GRN
C108
10
[WB] LT_GRN
7
Front HFL-ANC/ Active Sound Control Microphone
C107
C110
[BD] GRN
[BD] BLU
[BD] BLK
[BD] WHT
[BD] GRN
[BD] RED
[BD] BLK
[BL] TAN
[BL] BLU
[BL] BRN
[BL] PNK
[BL] BLU
[BL] GRY
[BL] LT_GRN
[BL] GRY
[BL] GRN
[BL] RED
[BL] BLK
[BL] WHT
C121
[BL] GRN
[BL] BLU
[BL] BLK
[BL] WHT
[BL] GRN
[BL] RED
[BL] BLK
[BL] GRY
[TA] LT_GRN
[TA] YEL
[TA] BLK
[TA] WHT
[TA] RED
[TA] GRN
[TA] BRN
[TA] GRY
Rearview Camera
A 24
A 32
A 16
A 20
A 4
A 19
A 14
A 23
A 21
A 5
A 22
A 6
HandsFreeLink Control Unit

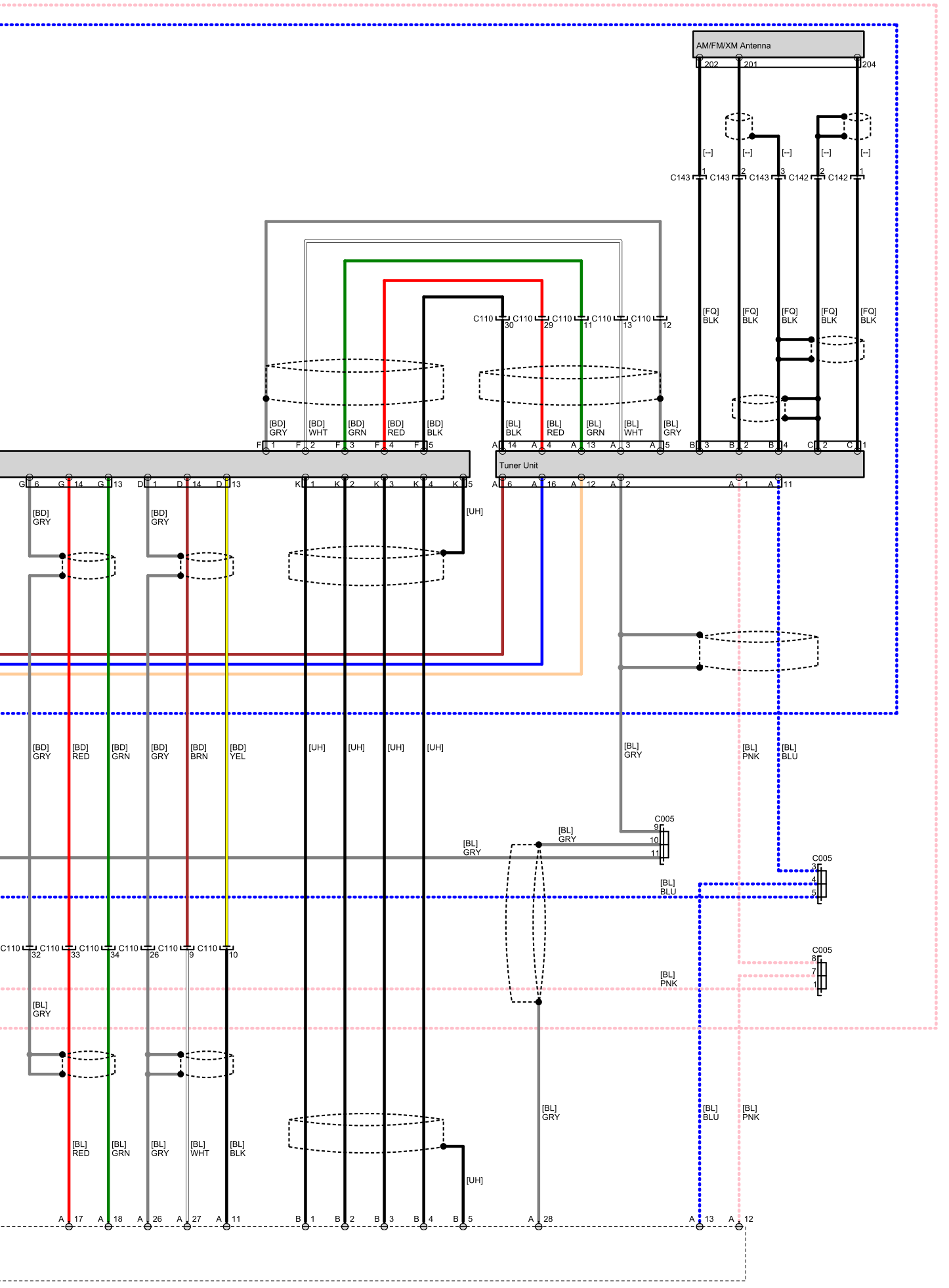
AM/FM/XM Antenna
202
201
204
[--]
C143
C142
[FQ] BLK
C110
30
29
11
13
12
[BD] GRY
[BD] WHT
[BD] GRN
[BD] RED
[BD] BLK
[BL] BLK
[BL] RED
[BL] GRN
[BL] WHT
[BL] GRY
Tuner Unit
[UH]
[BD] BRN
[BD] YEL
[BL] PNK
[BL] BLU
C005
32
33
34
26
9
10
[BL] GRY
[BL] RED
[BL] GRN
[BL] WHT
[BL] BLK
17
18
27
28
13
12