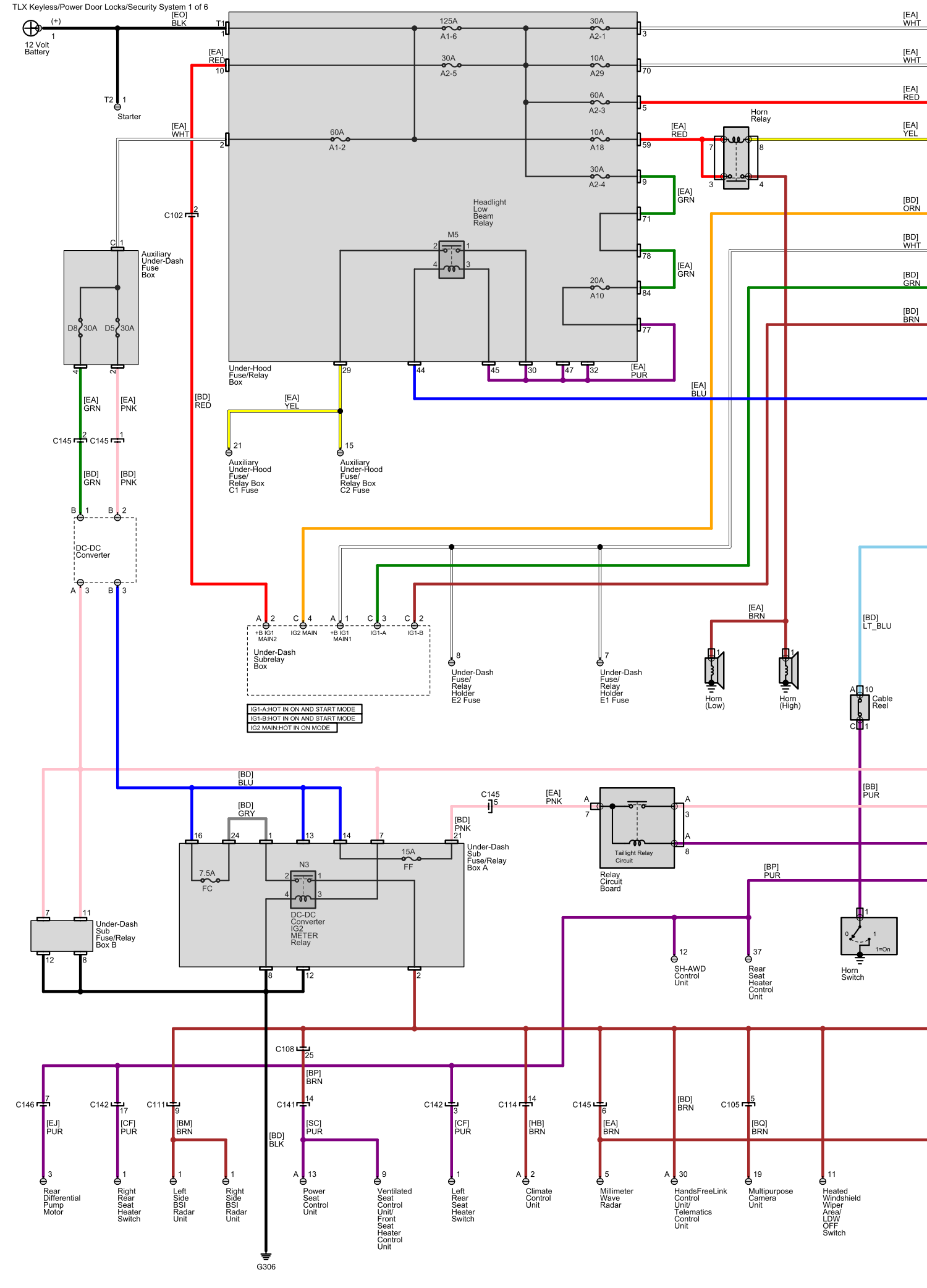
12 Volt Battery
Starter
Under-Hood Fuse/Relay Box
Headlight Low Beam Relay
M5
Horn Relay
Auxiliary Under-Dash Fuse Box
D8 30A
D5 30A
DC-DC Converter
Under-Dash Subrelay Box
+B IG1 MAIN2
IG2 MAIN
+B IG1 MAIN1
IG1-A
IG1-B
IG1-A:HOT IN ON AND START MODE
IG1-B:HOT IN ON AND START MODE
IG2 MAIN:HOT IN ON MODE
Under-Dash Fuse/ Relay Holder E2 Fuse
Under-Dash Fuse/ Relay Holder E1 Fuse
Horn (Low)
Horn (High)
Cable Reel
Under-Dash Sub Fuse/Relay Box B
Under-Dash Sub Fuse/Relay Box A
N3
DC-DC Converter IG2 METER Relay
Taillight Relay Circuit
Relay Circuit Board
SH-AWD Control Unit
Rear Seat Heater Control Unit
Horn Switch
Rear Differential Pump Motor
Right Rear Seat Heater Switch
Left Side BSI Radar Unit
Right Side BSI Radar Unit
Power Seat Control Unit
Ventilated Seat Control Unit/ Front Seat Heater Control Unit
Left Rear Seat Heater Switch
Climate Control Unit
Millimeter Wave Radar
HandsFreeLink Control Unit/ Telematics Control Unit
Multipurpose Camera Unit
Heated Windshield Wiper Area/ LDW OFF Switch
G306

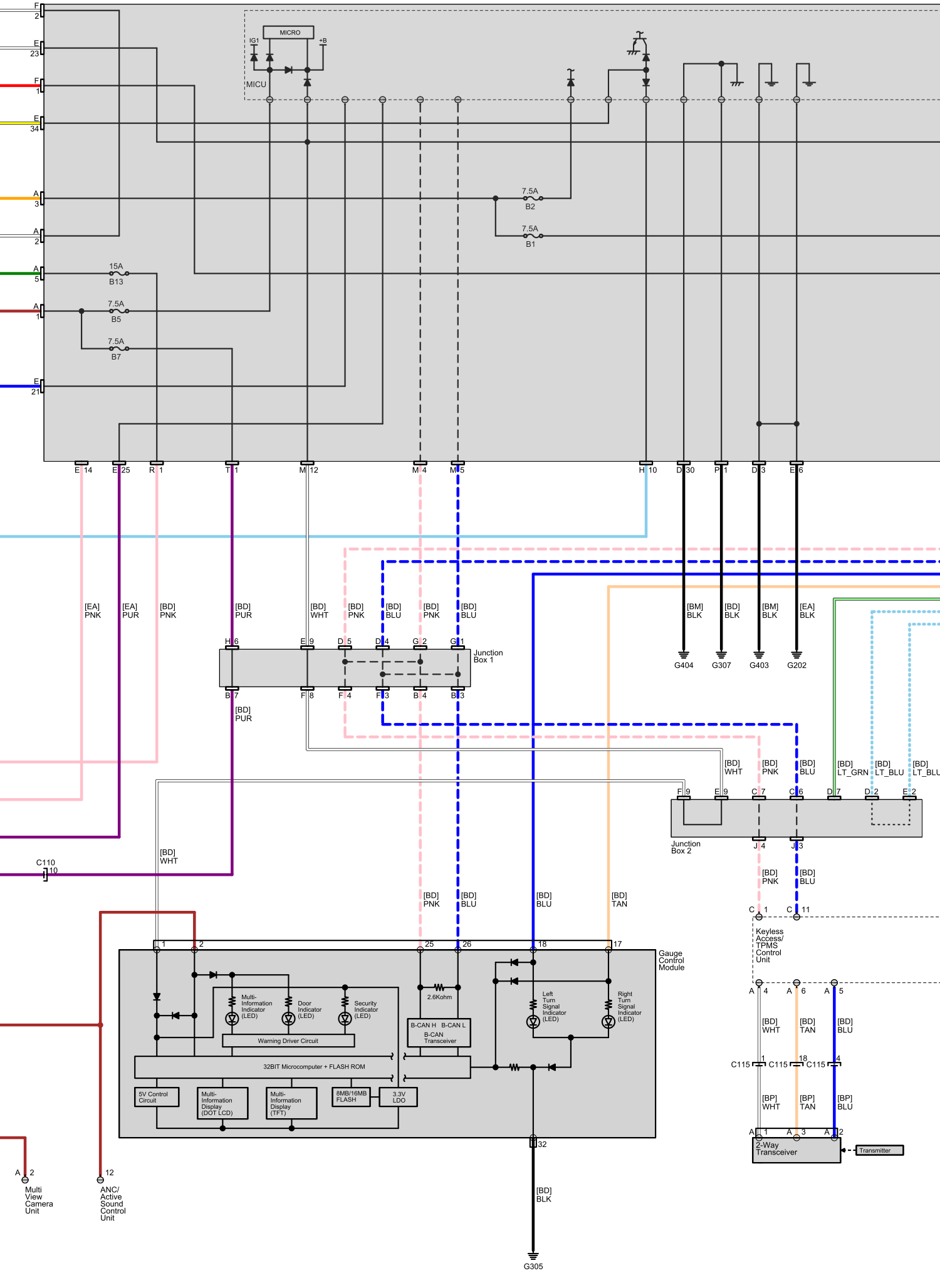
MICRO
IG1
+B
MICU
7.5A
B2
7.5A
B1
15A
B13
7.5A
B5
7.5A
B7
E 14
E 25
R 1
T 1
M 12
M 4
M 5
H 10
D 30
P 1
D 3
E 6
[EA] PNK
[EA] PUR
[BD] PNK
[BD] PUR
[BD] WHT
[BD] PNK
[BD] BLU
[BD] PNK
[BD] BLU
[BM] BLK
[BD] BLK
[BM] BLK
[EA] BLK
G404
G307
G403
G202
H 6
E 9
D 5
D 4
G 2
G 1
Junction Box 1
B 7
F 8
F 4
F 3
B 4
B 3
[BD] PUR
[BD] WHT
[BD] PNK
[BD] BLU
[BD] LT_GRN
[BD] LT_BLU
[BD] LT_BLU
F 9
E 9
C 7
C 6
D 7
D 2
E 2
Junction Box 2
J 4
J 3
C110
10
[BD] WHT
[BD] PNK
[BD] BLU
[BD] PNK
[BD] BLU
[BD] BLU
[BD] TAN
C 1
C 11
Keyless Access/ TPMS Control Unit
1
2
25
26
18
17
Gauge Control Module
Multi-Information Indicator (LED)
Door Indicator (LED)
Security Indicator (LED)
2.6Kohm
Left Turn Signal Indicator (LED)
Right Turn Signal Indicator (LED)
B-CAN H
B-CAN L
B-CAN Transceiver
Warning Driver Circuit
32BIT Microcomputer + FLASH ROM
5V Control Circuit
Multi-Information Display (DOT LCD)
Multi-Information Display (TFT)
8MB/16MB FLASH
3.3V LDO
32
A 4
A 6
A 5
[BD] WHT
[BD] TAN
[BD] BLU
C115 1
C115 18
C115 4
[BP] WHT
[BP] TAN
[BP] BLU
A 1
A 3
A 2
2-Way Transceiver
Transmitter
A 2
Multi View Camera Unit
12
ANC/ Active Sound Control Unit
[BD] BLK
G305

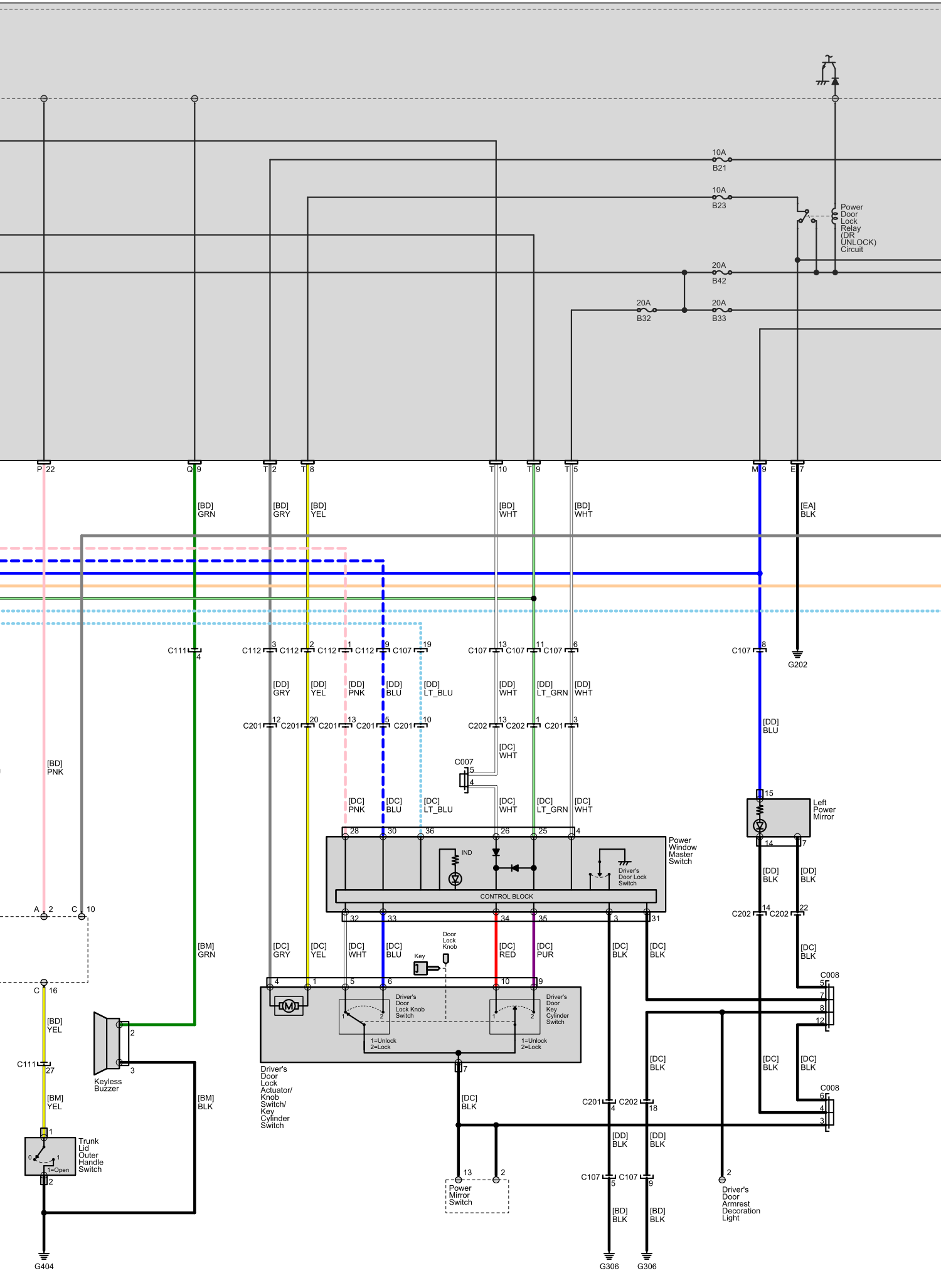
10A
B21
10A
B23
Power Door Lock Relay (DR UNLOCK) Circuit
20A
B42
20A
B32
20A
B33
P 22
Q 9
T 2
T 8
T 10
T 9
T 5
M 9
E 7
[BD] GRN
[BD] GRY
[BD] YEL
[BD] WHT
[BD] WHT
[EA] BLK
G202
C111 4
C112 3
C112 2
C112 1
C112 9
C107 19
C107 13
C107 11
C107 6
C107 8
[DD] GRY
[DD] YEL
[DD] PNK
[DD] BLU
[DD] LT_BLU
[DD] WHT
[DD] LT_GRN
[DD] WHT
[DD] BLU
C201 12
C201 20
C201 13
C201 5
C201 10
C202 13
C202 1
C201 3
[DC] WHT
C007
[BD] PNK
[DC] PNK
[DC] BLU
[DC] LT_BLU
[DC] WHT
[DC] LT_GRN
[DC] WHT
Left Power Mirror
Power Window Master Switch
IND
Driver's Door Lock Switch
CONTROL BLOCK
[DD] BLK
[DD] BLK
A 2
C 10
C202 14
C202 22
[BM] GRN
[DC] GRY
[DC] YEL
[DC] WHT
[DC] BLU
[DC] RED
[DC] PUR
[DC] BLK
[DC] BLK
Door Lock Knob
Key
[DC] BLK
C008
C 16
[BD] YEL
Driver's Door Lock Knob Switch
Driver's Door Key Cylinder Switch
1=Unlock
2=Lock
1=Unlock
2=Lock
C111 27
Keyless Buzzer
[DC] BLK
[DC] BLK
[DC] BLK
[BM] YEL
[BM] BLK
Driver's Door Lock Actuator/ Knob Switch/ Key Cylinder Switch
[DC] BLK
C201 4
C202 18
C008
[DD] BLK
[DD] BLK
Trunk Lid Outer Handle Switch
1=Open
Power Mirror Switch
C107 5
C107 9
Driver's Door Armrest Decoration Light
[BD] BLK
[BD] BLK
G404
G306
G306

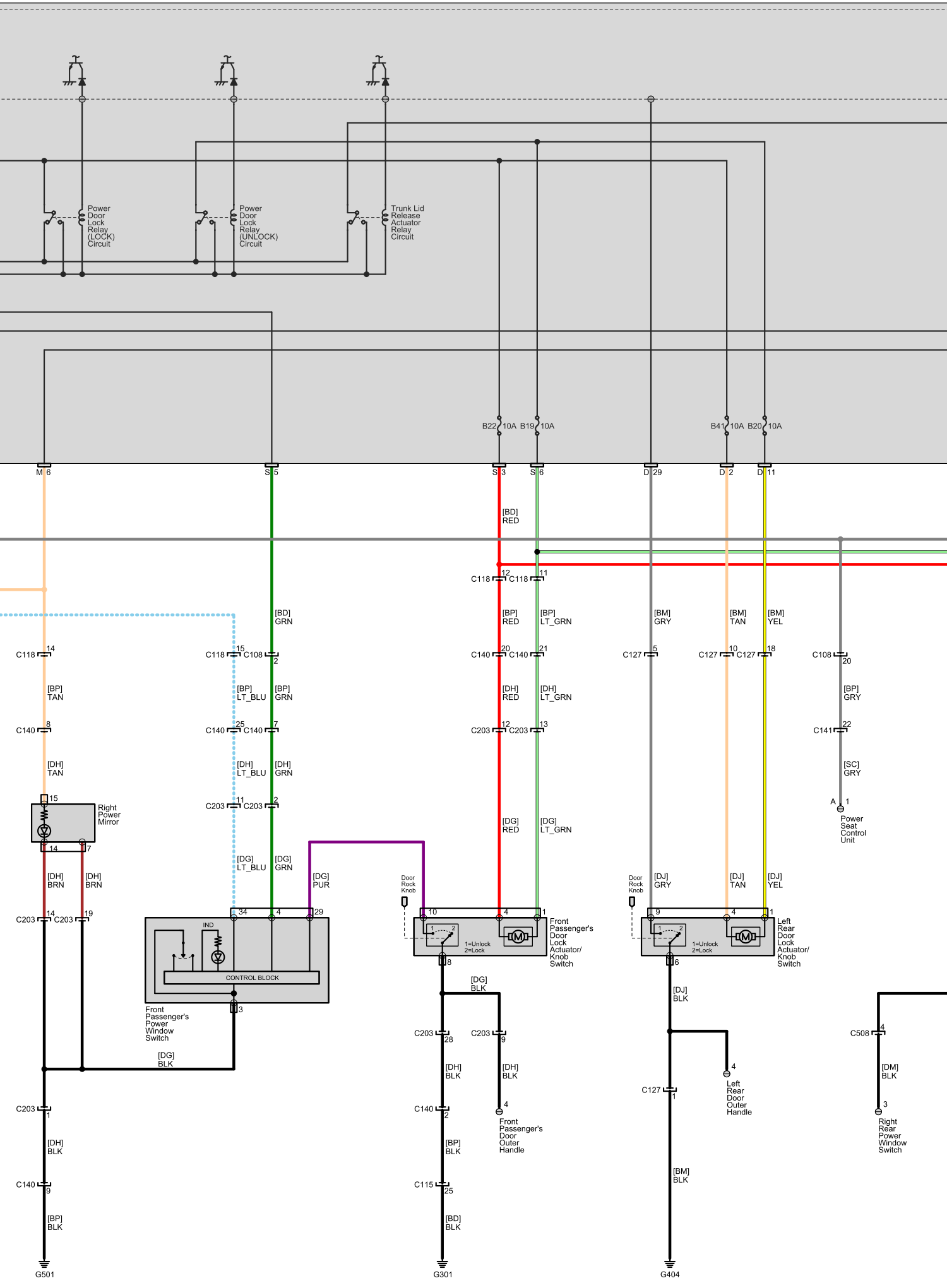
Power Door Lock Relay (LOCK) Circuit
Power Door Lock Relay (UNLOCK) Circuit
Trunk Lid Release Actuator Relay Circuit
B22 10A
B19 10A
B41 10A
B20 10A
M 6
S 5
S 3
S 6
D 29
D 2
D 11
[BD] RED
[BD] GRN
[BP] RED
[BP] LT_GRN
[BM] GRY
[BM] TAN
[BM] YEL
[BP] TAN
[BP] LT_BLU
[BP] GRN
[DH] RED
[DH] LT_GRN
[BP] GRY
[DH] TAN
[DH] LT_BLU
[DH] GRN
[SC] GRY
Right Power Mirror
[DG] RED
[DG] LT_GRN
[DH] BRN
[DH] BRN
[DG] LT_BLU
[DG] GRN
[DG] PUR
Door Rock Knob
[DJ] GRY
[DJ] TAN
[DJ] YEL
Power Seat Control Unit
IND
CONTROL BLOCK
Front Passenger's Power Window Switch
1=Unlock
2=Lock
Front Passenger's Door Lock Actuator/ Knob Switch
Left Rear Door Lock Actuator/ Knob Switch
[DG] BLK
[DJ] BLK
[DH] BLK
[BP] BLK
[BD] BLK
[BM] BLK
[DM] BLK
Front Passenger's Door Outer Handle
Left Rear Door Outer Handle
Right Rear Power Window Switch
G501
G301
G404

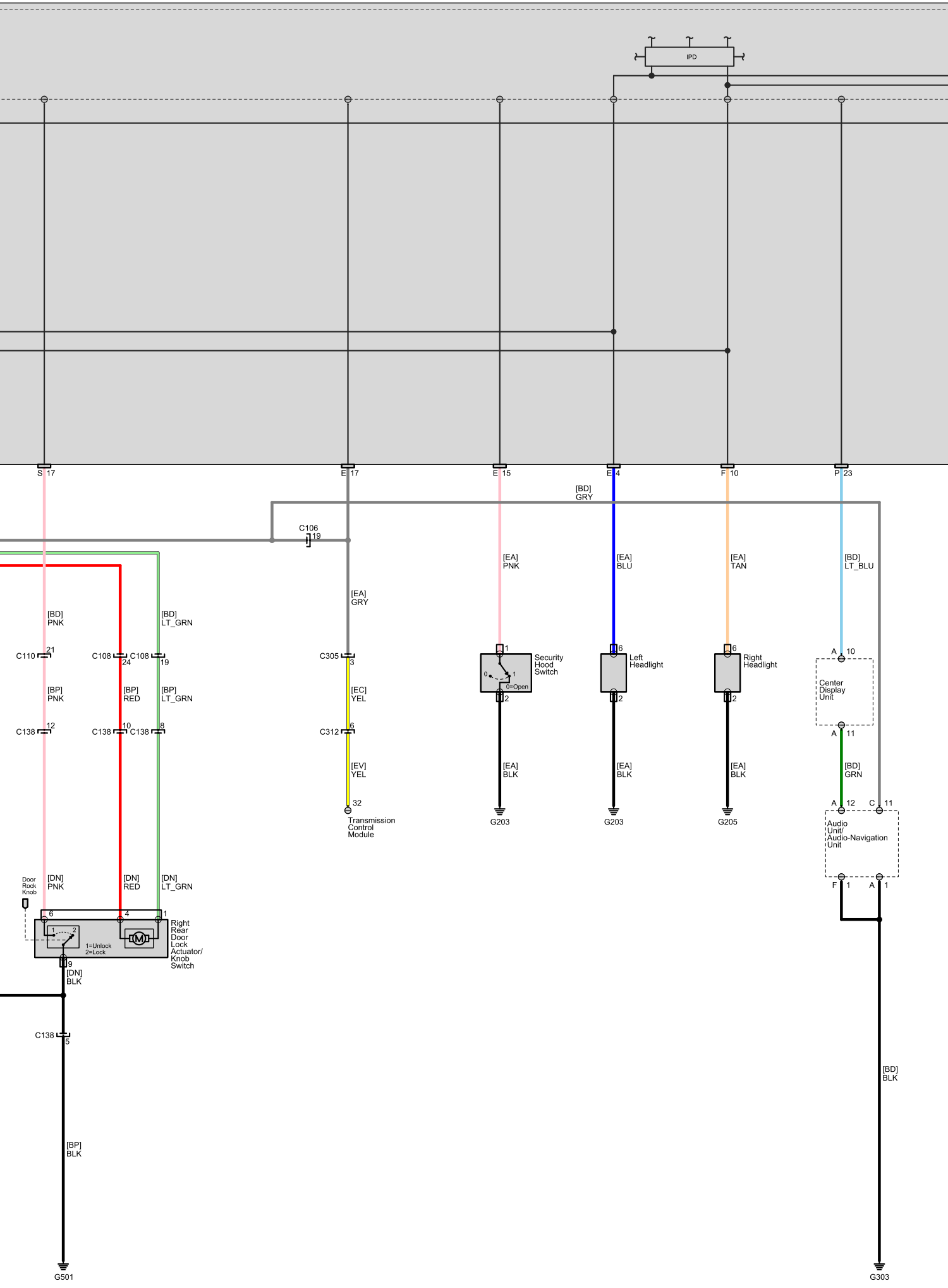
IPD
S 17
E 17
E 15
E 4
F 10
P 23
[BD] GRY
C106 19
[EA] PNK
[EA] BLU
[EA] TAN
[BD] LT_BLU
[EA] GRY
[BD] PNK
[BD] LT_GRN
C110 21
C108 24
C108 19
C305 3
[BP] PNK
[BP] RED
[BP] LT_GRN
[EC] YEL
C138 12
C138 10
C138 8
C312 6
[EV] YEL
32
Transmission Control Module
Security Hood Switch
0=Open
[EA] BLK
G203
Left Headlight
G203
Right Headlight
G205
A 10
Center Display Unit
A 11
[BD] GRN
A 12
C 11
Audio Unit/ Audio-Navigation Unit
F 1
A 1
Door Rock Knob
[DN] PNK
[DN] RED
[DN] LT_GRN
Right Rear Door Lock Actuator/ Knob Switch
1=Unlock
2=Lock
[DN] BLK
C138 5
[BP] BLK
G501
[BD] BLK
G303

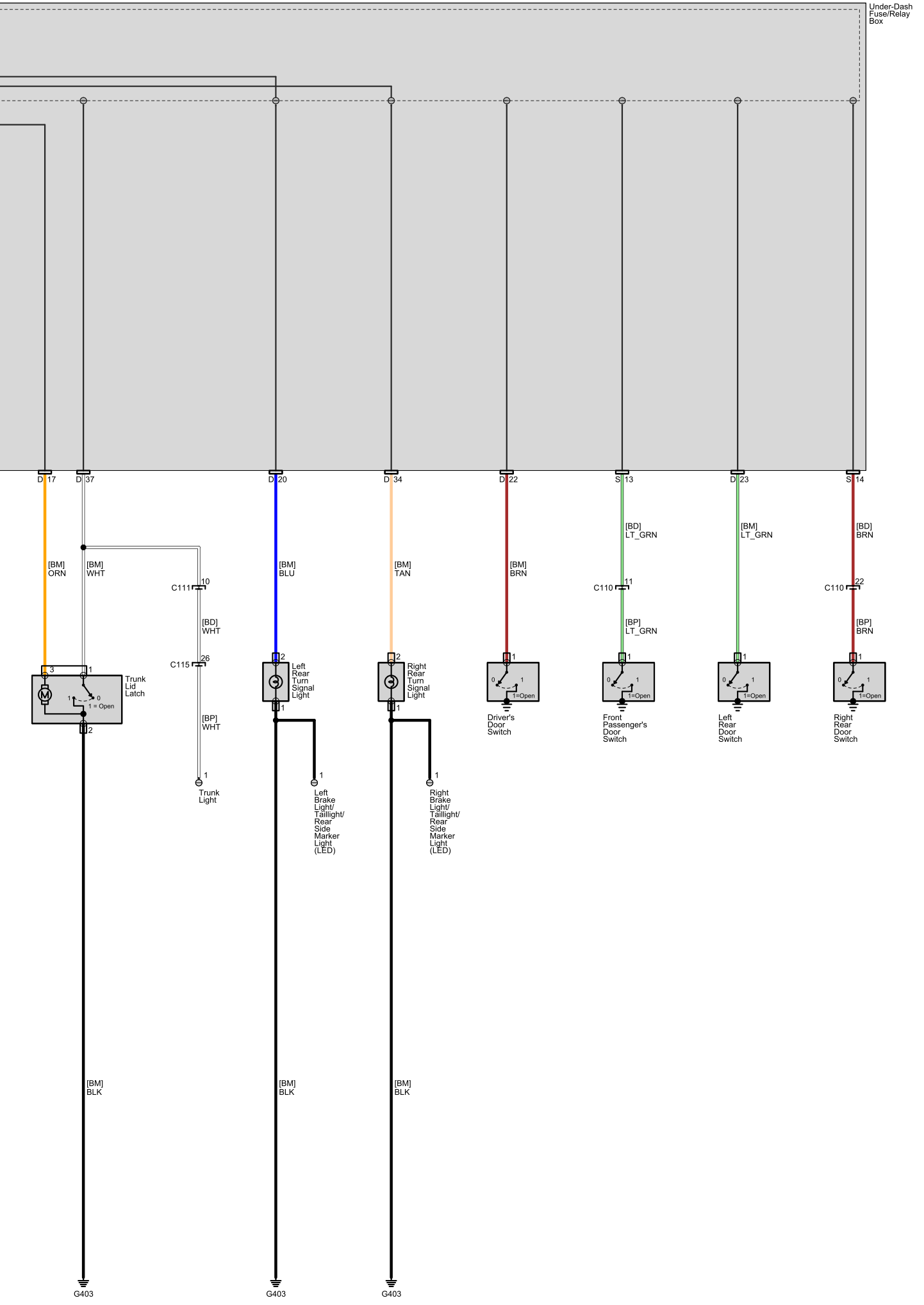
Under-Dash Fuse/Relay Box
D 17
D 37
D 20
D 34
D 22
S 13
D 23
S 14
[BM] ORN
[BM] WHT
C111 10
[BD] WHT
C115 26
[BP] WHT
Trunk Lid Latch
1 = Open
Trunk Light
[BM] BLK
G403
[BM] BLU
Left Rear Turn Signal Light
Left Brake Light/ Taillight/ Rear Side Marker Light (LED)
[BM] BLK
G403
[BM] TAN
Right Rear Turn Signal Light
Right Brake Light/ Taillight/ Rear Side Marker Light (LED)
[BM] BLK
G403
[BM] BRN
Driver's Door Switch
[BD] LT_GRN
C110 11
[BP] LT_GRN
Front Passenger's Door Switch
[BM] LT_GRN
Left Rear Door Switch
[BD] BRN
C110 22
[BP] BRN
Right Rear Door Switch
1=Open