Turn Signal/Hazard Warning Lights

Circuit Diagram

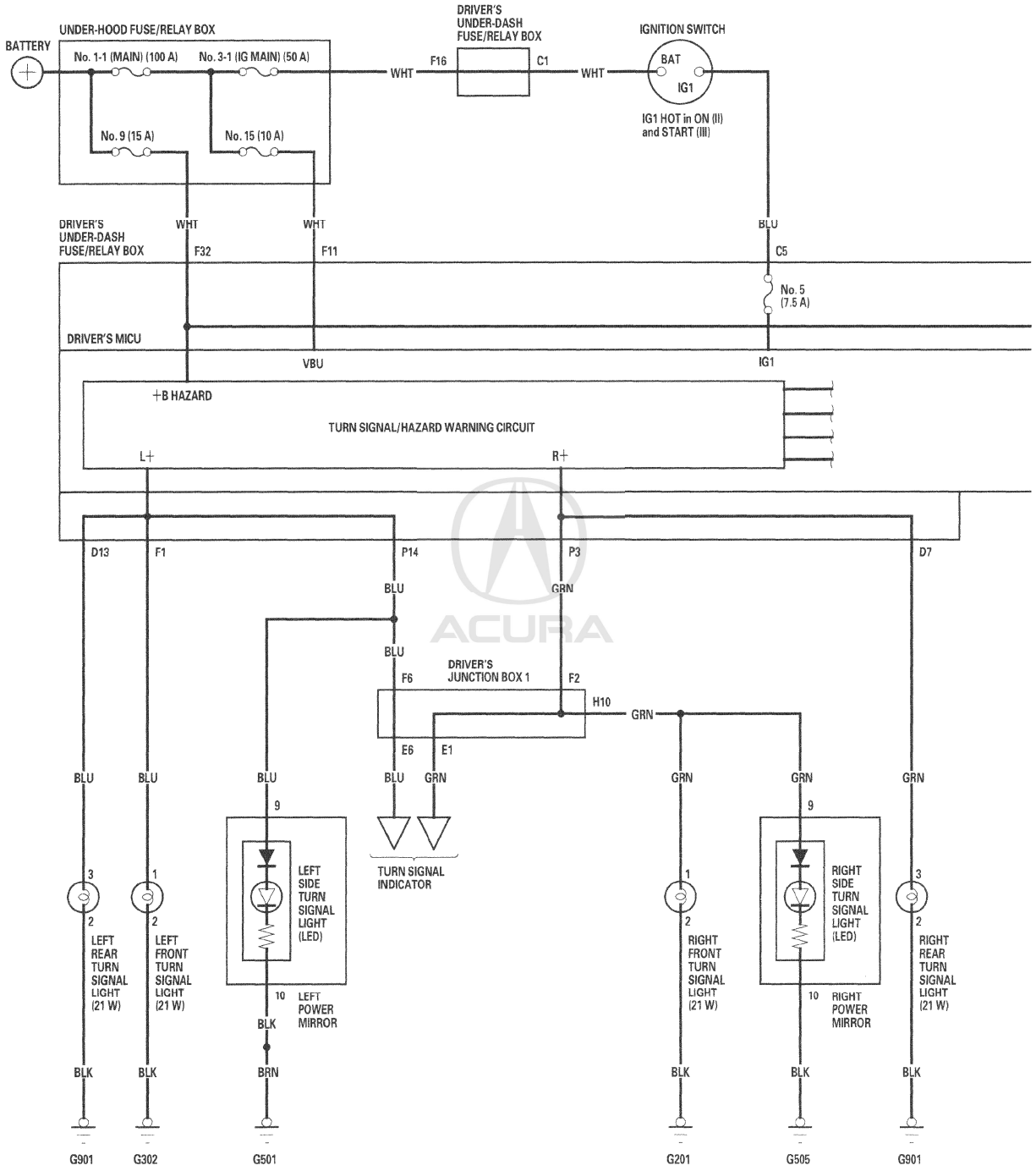

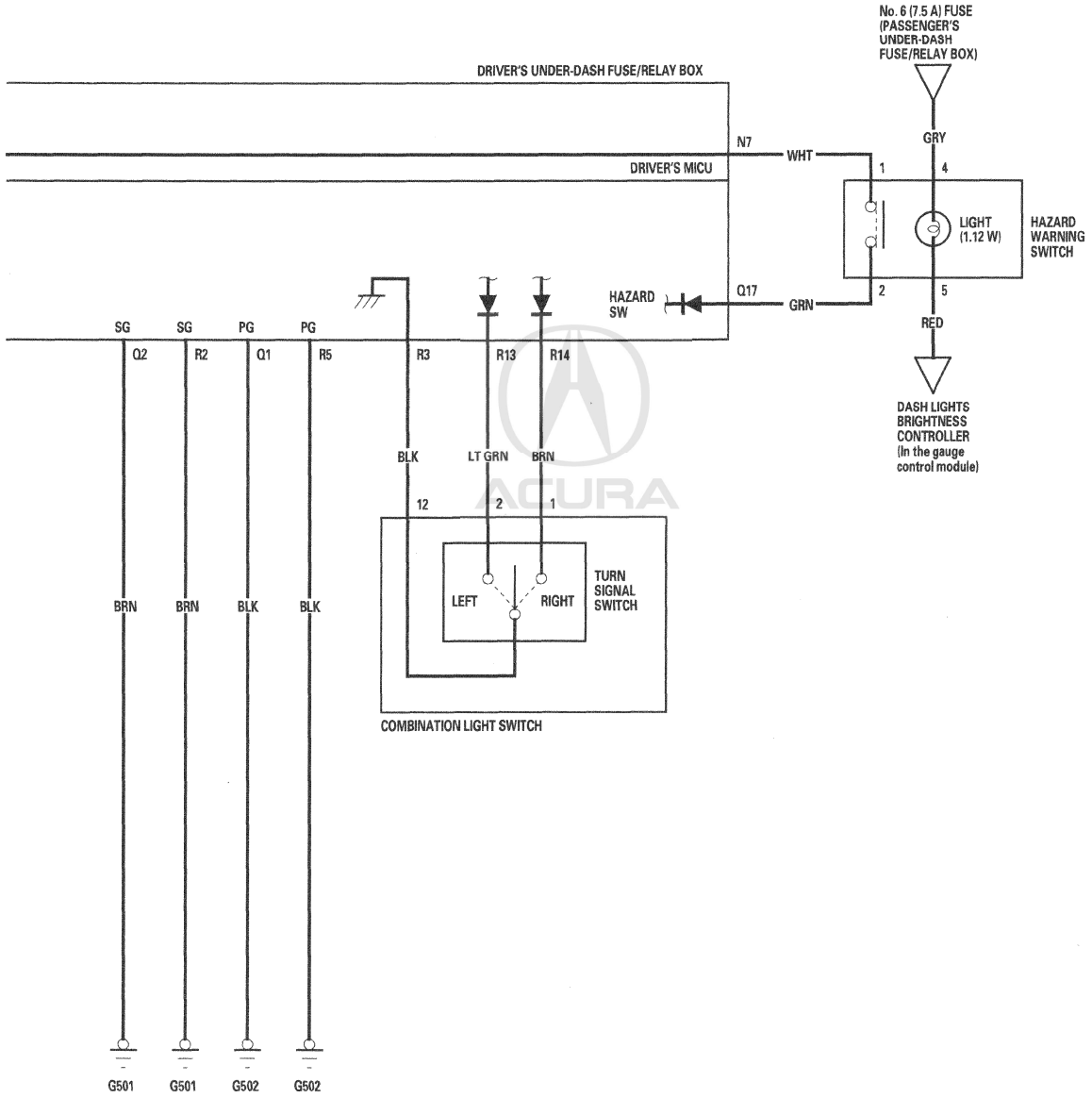
No. 6 (7.5 A) FUSE
(PASSENGER'S
UNDER-DASH
FUSE/RELAY BOX)
DRIVER'S UNDER-DASH FUSE/RELAY BOX
N7
WHT
GRY
DRIVER'S MICU
1
4
LIGHT
(1.12 W)
HAZARD
WARNING
SWITCH
HAZARD
SW
Q17
GRN
2
5
RED
SG
SG
PG
PG
Q2
R2
Q1
R5
R3
R13
R14
DASH LIGHTS
BRIGHTNESS
CONTROLLER
(In the gauge
control module)
BLK
LT GRN
BRN
12
2
1
LEFT
RIGHT
TURN
SIGNAL
SWITCH
BRN
BRN
BLK
BLK
COMBINATION LIGHT SWITCH
G501
G501
G502
G502