RDX Under-Hood Fuse/Relay Box 1 of 3

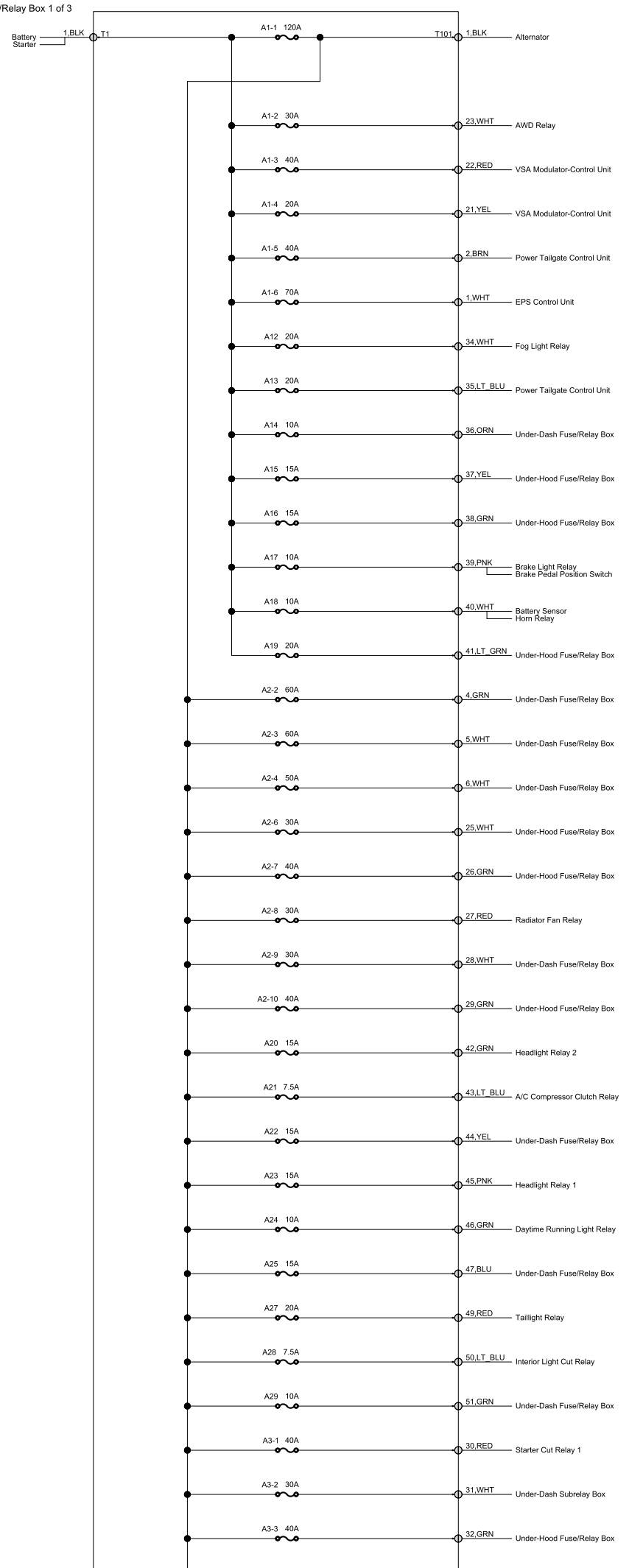

RDX Under-Hood Fuse/Relay Box 2 of 3

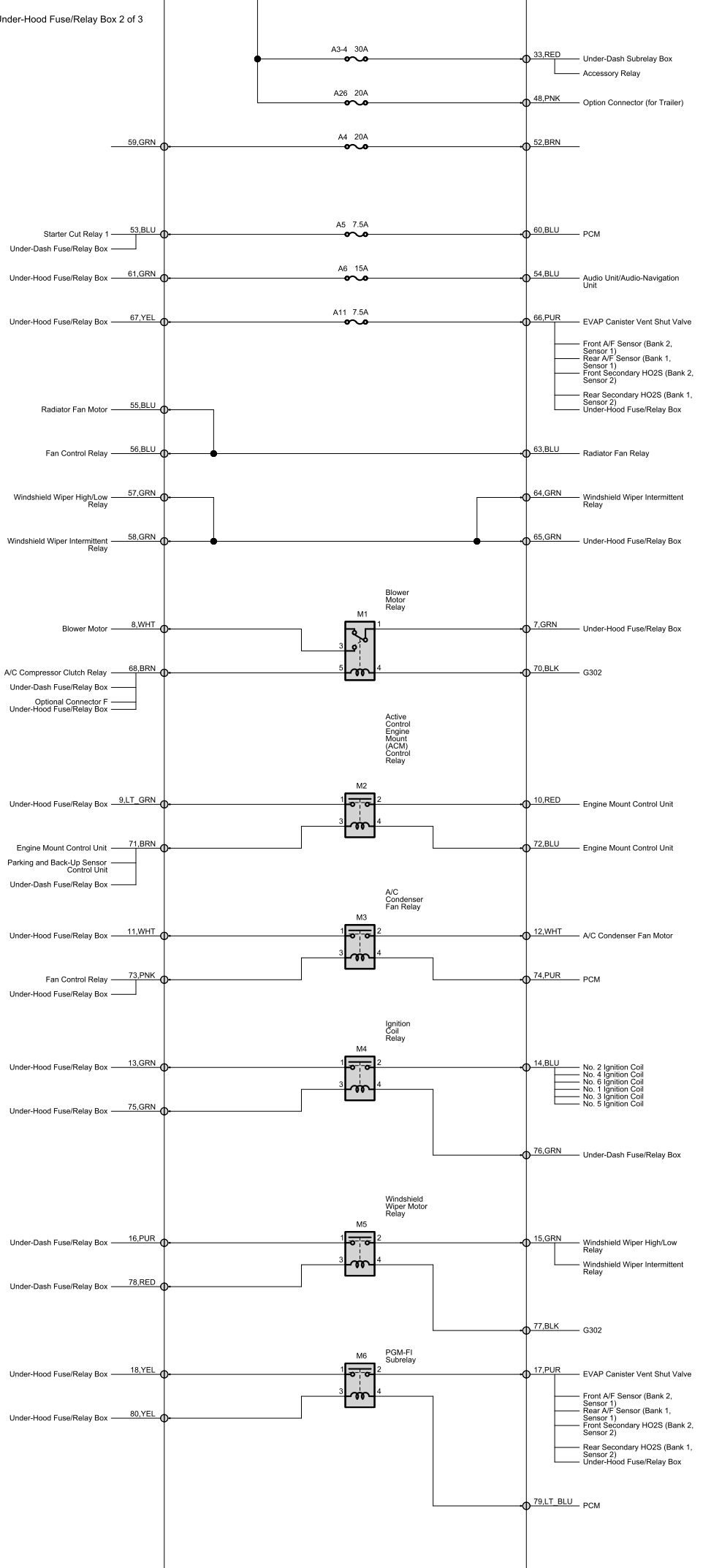
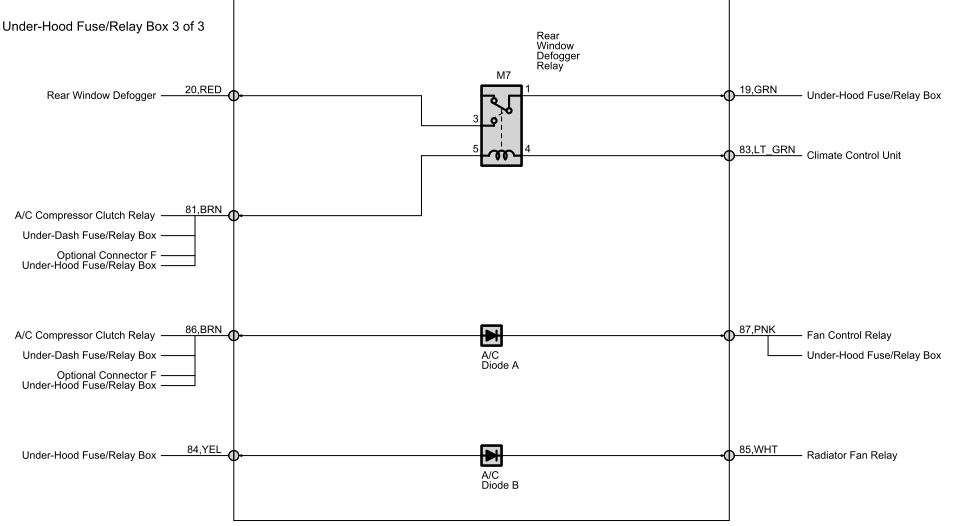
RDX Under-Hood Fuse/Relay Box 3 of 3