Dashboard Center Display Visor Removal And Installation (2013-18)

Removal

1. Dashboard Center Panel - Remove

	1. Remove the dashboard center panel: 1. Without navigation 2. With navigation - Refer to: Audio-Navigation Unit Removal and Installation (2013-15), or Audio-Navigation Unit Removal and Installation (2016-18)

2. Center Display Visor - Remove

Without navigation	**Center Display Visor Assembly** 1. Remove the center display visor assembly (A) 2. Disconnect the automatic lighting/sunlight sensor connector (B).

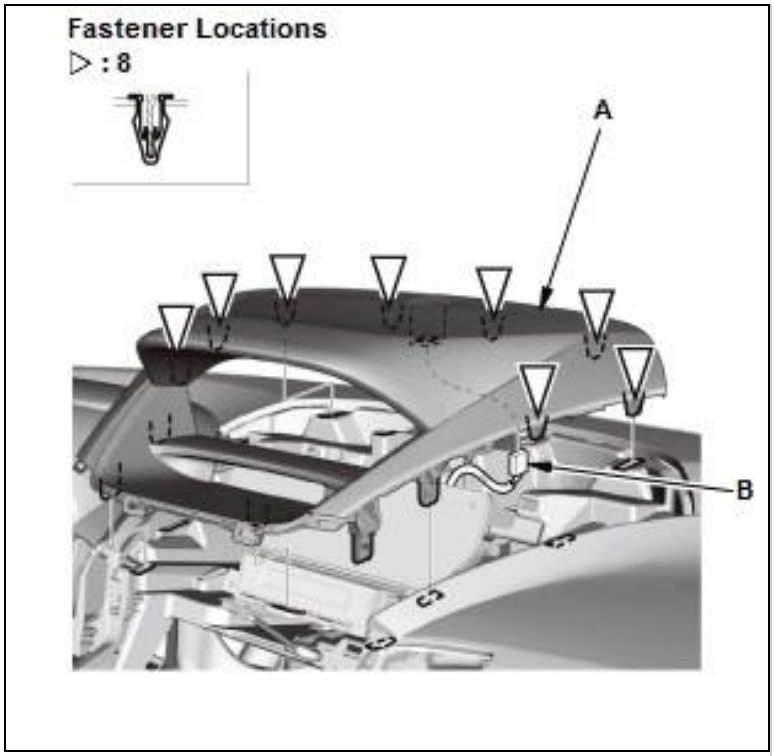

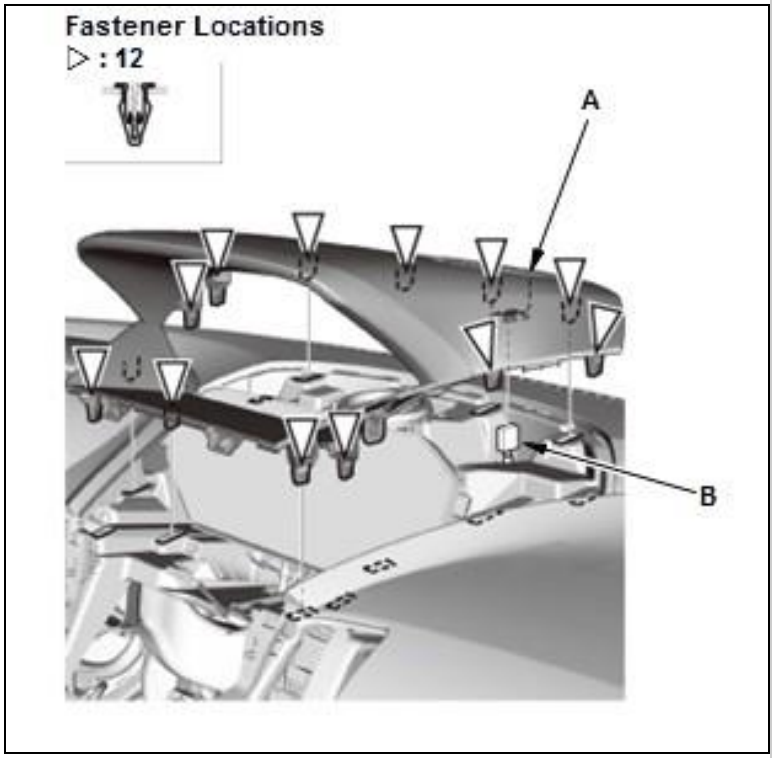

Courtesy of HONDA, U.S.A., INC.HONDA, U.S.A., INC.

With navigation

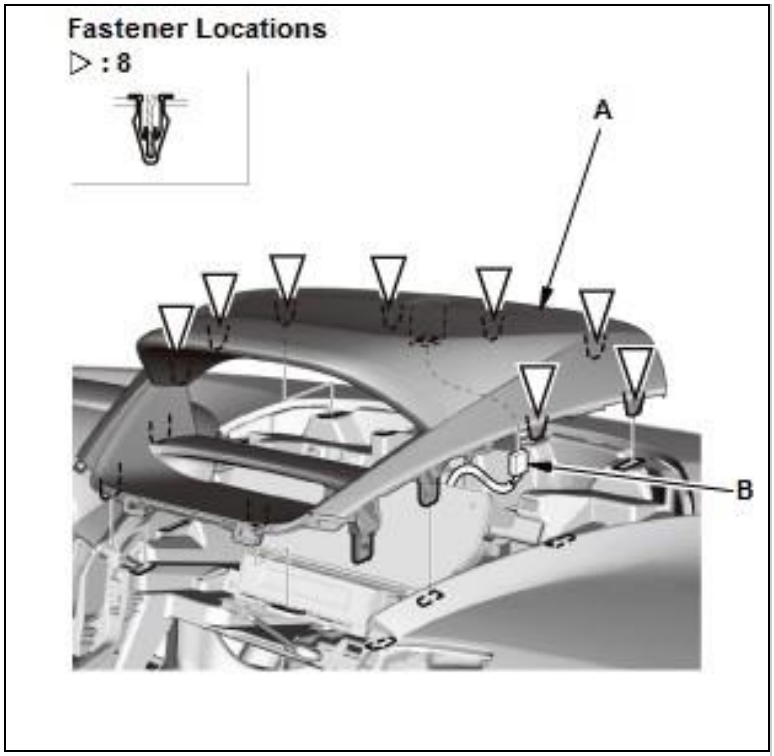

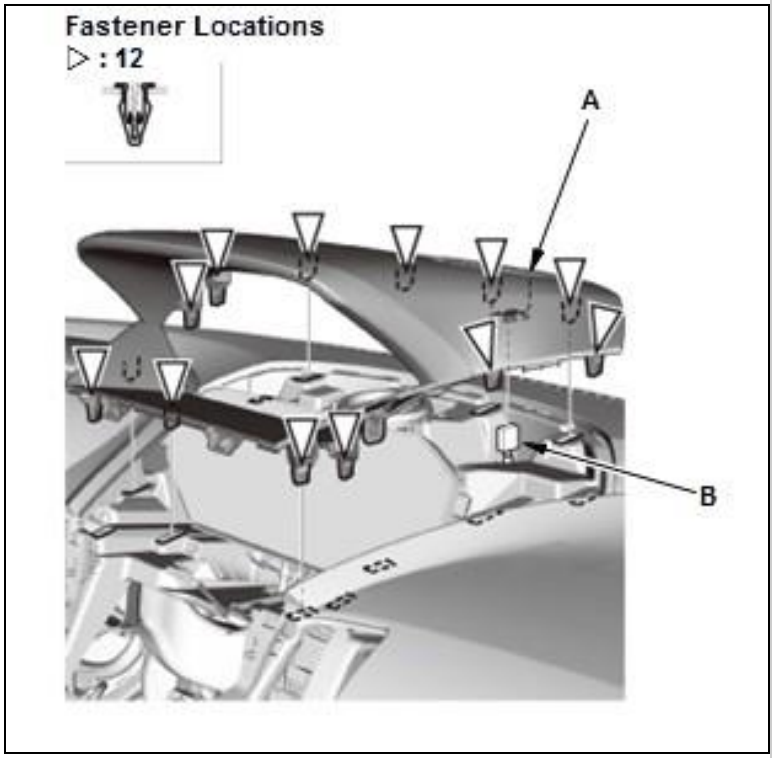

Courtesy of HONDA, U.S.A., INC.HONDA, U.S.A., INC.

Without navigation	**Lower Inner Center Display Visor** 3. Remove the lower inner center display visor (A).

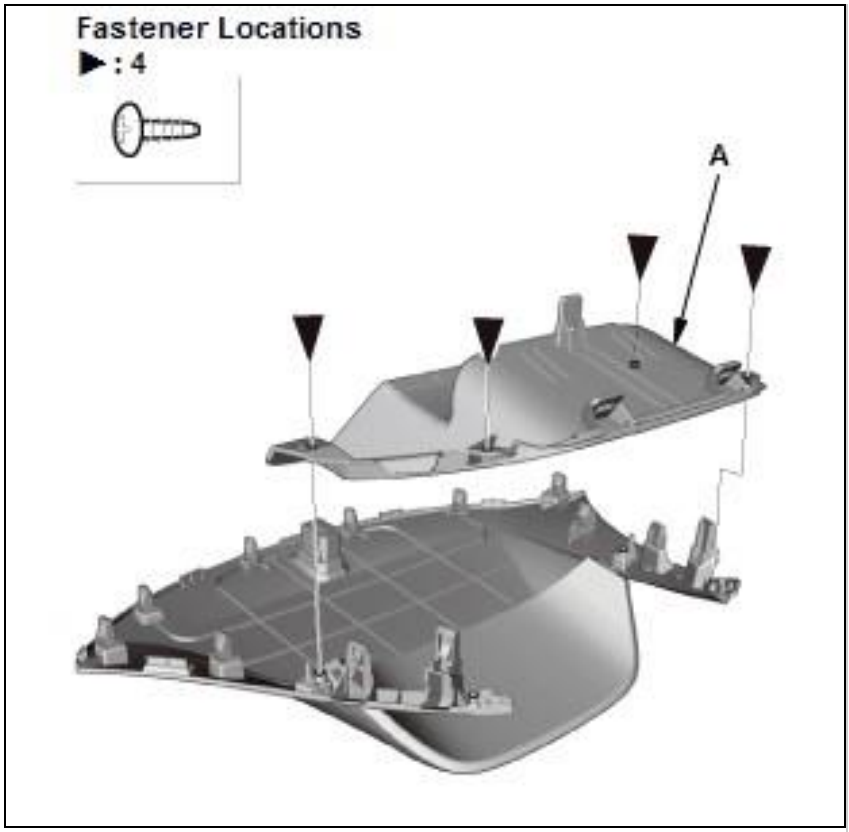

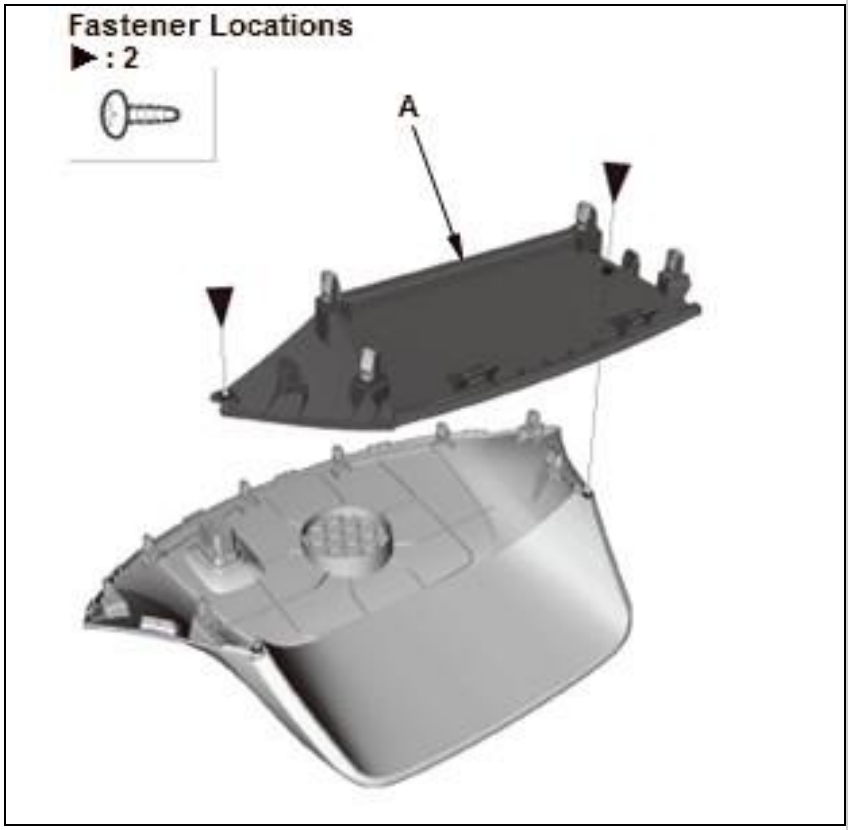

Courtesy of HONDA, U.S.A., INC.HONDA, U.S.A., INC.

With navigation

Without navigation	**Upper Inner Center Display Visor**

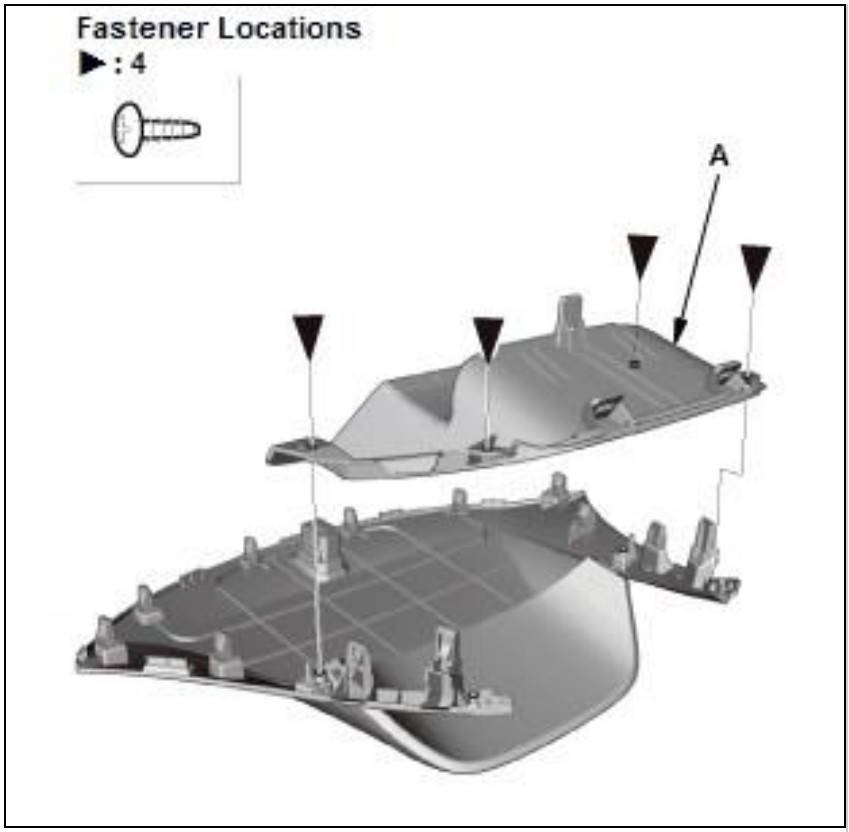

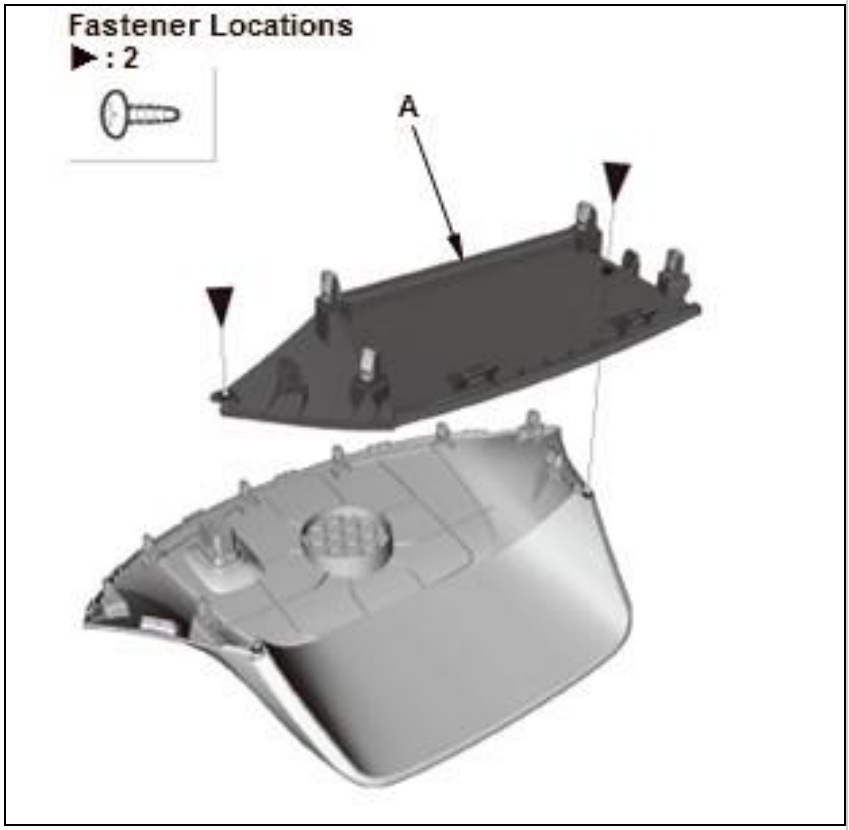

Courtesy of HONDA, U.S.A., INC.HONDA, U.S.A., INC.

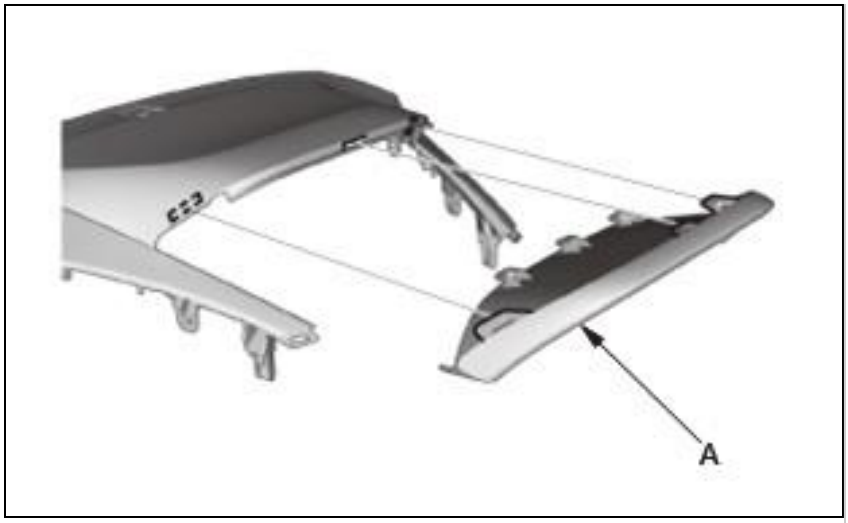

Courtesy of HONDA, U.S.A., INC.HONDA, U.S.A., INC.

4. Remove the upper inner center display visor (A).

With navigation

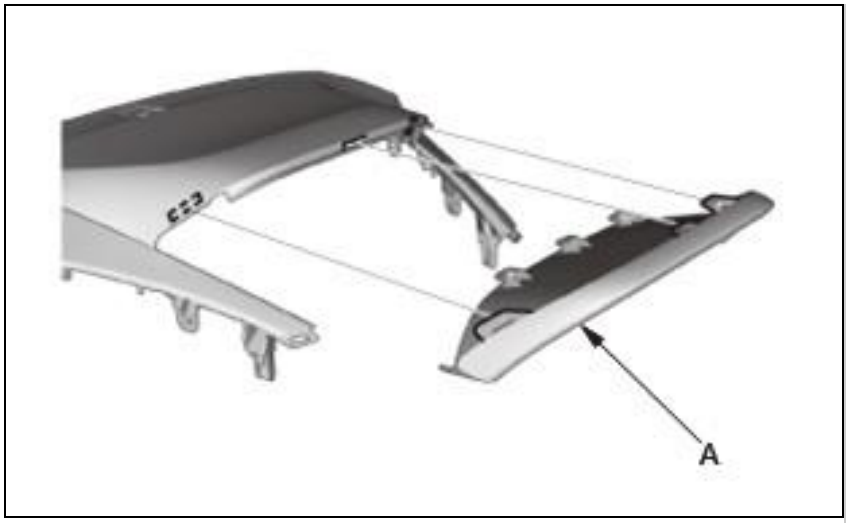

Courtesy of HONDA, U.S.A., INC.HONDA, U.S.A., INC.

Installation 1. Center Display Visor - Install

Without navigation	**Upper Inner Center Display Visor** 1. Install the upper inner center display visor (A).

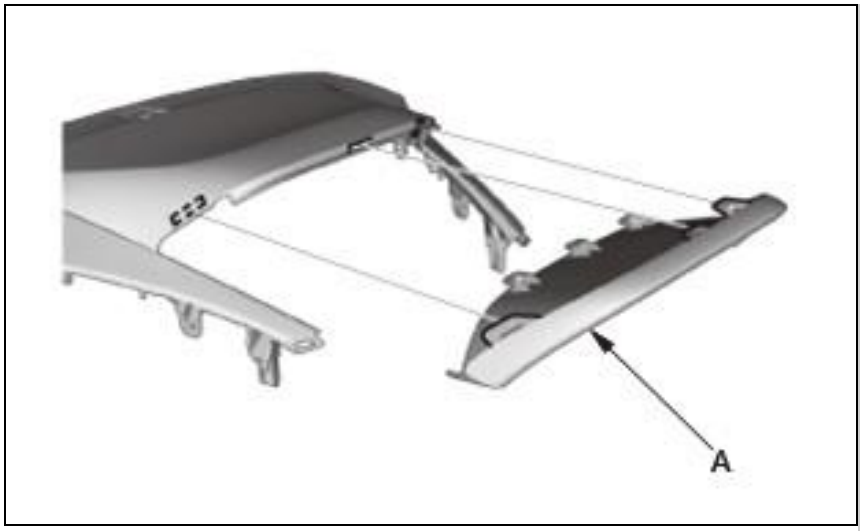

Courtesy of HONDA, U.S.A., INC.HONDA, U.S.A., INC.

With navigation

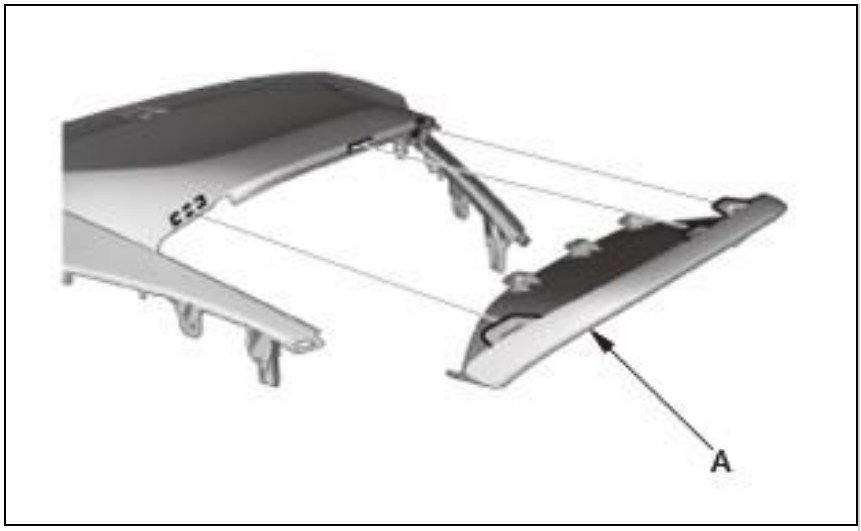

Courtesy of HONDA, U.S.A., INC.HONDA, U.S.A., INC.

Without navigation	**Lower Inner Center Display Visor** 2. Install the lower inner center display visor (A).

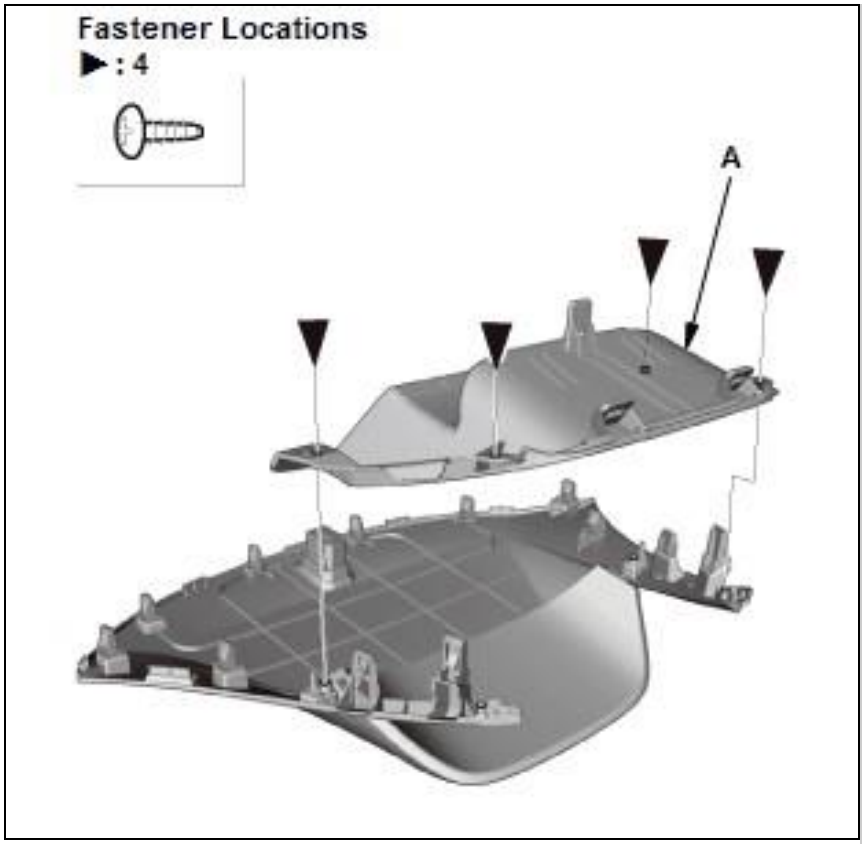

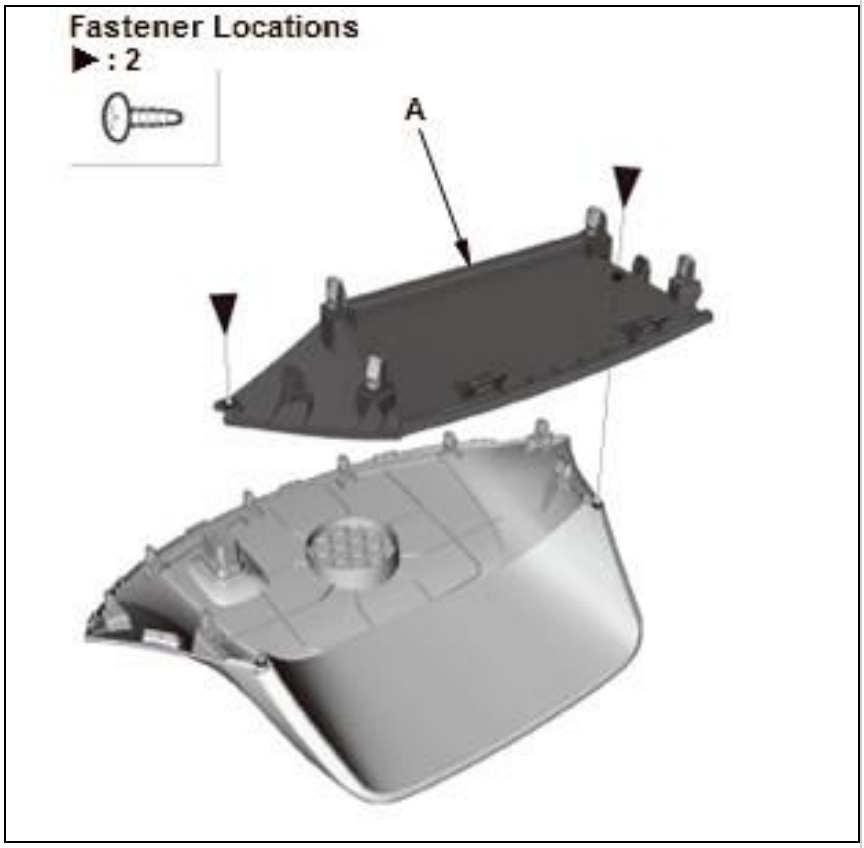

Courtesy of HONDA, U.S.A., INC.HONDA, U.S.A., INC.

With navigation

Without navigation	**Center Display Visor Assembly**

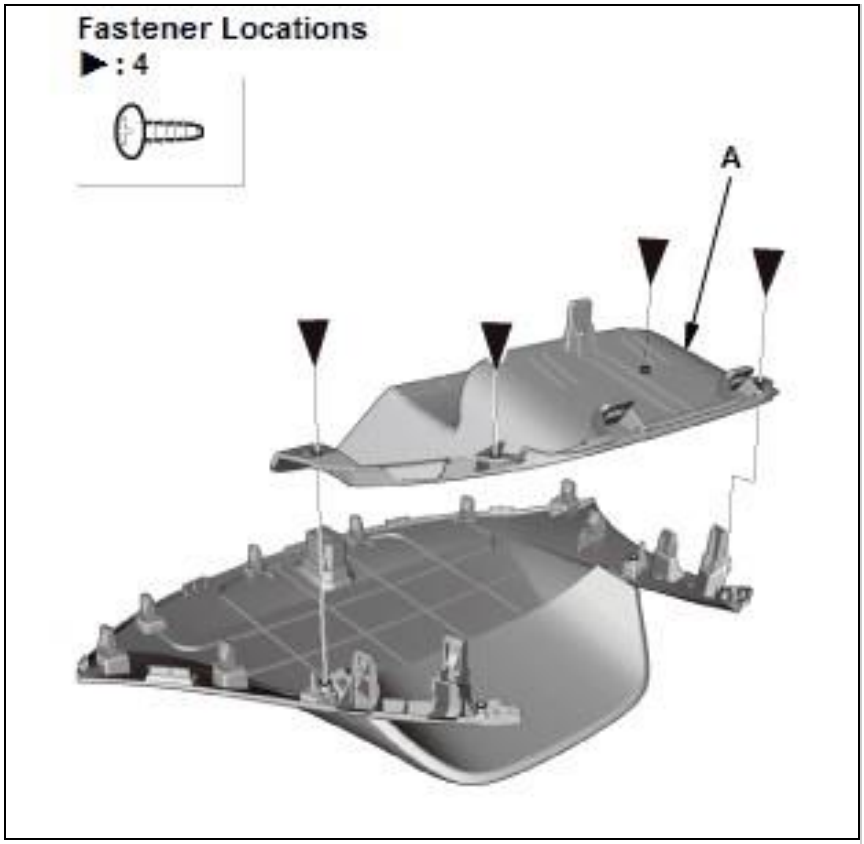

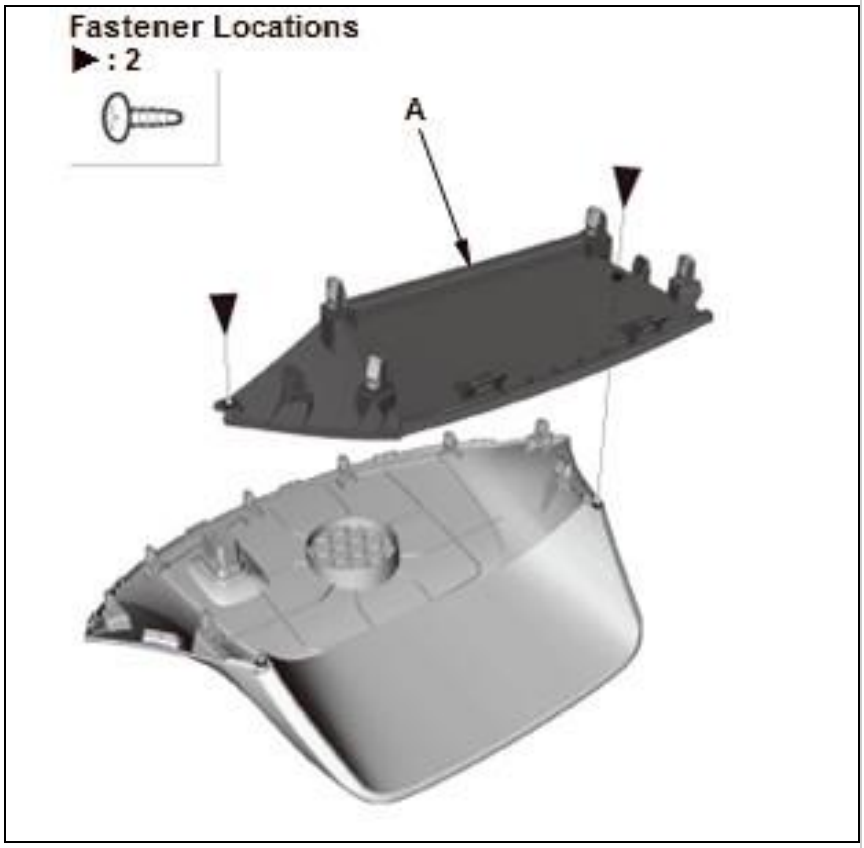

Courtesy of HONDA, U.S.A., INC.HONDA, U.S.A., INC.

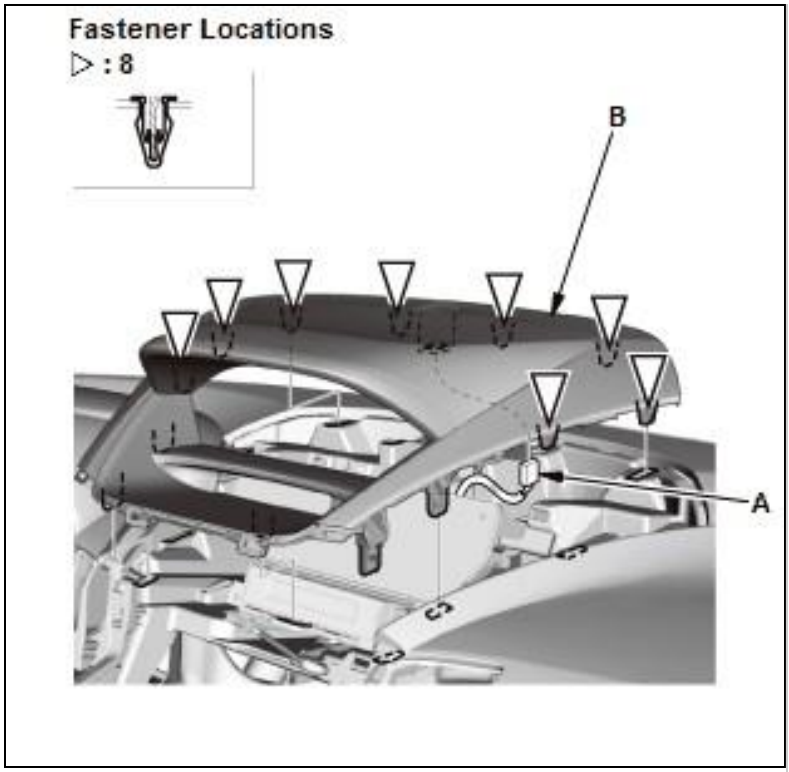

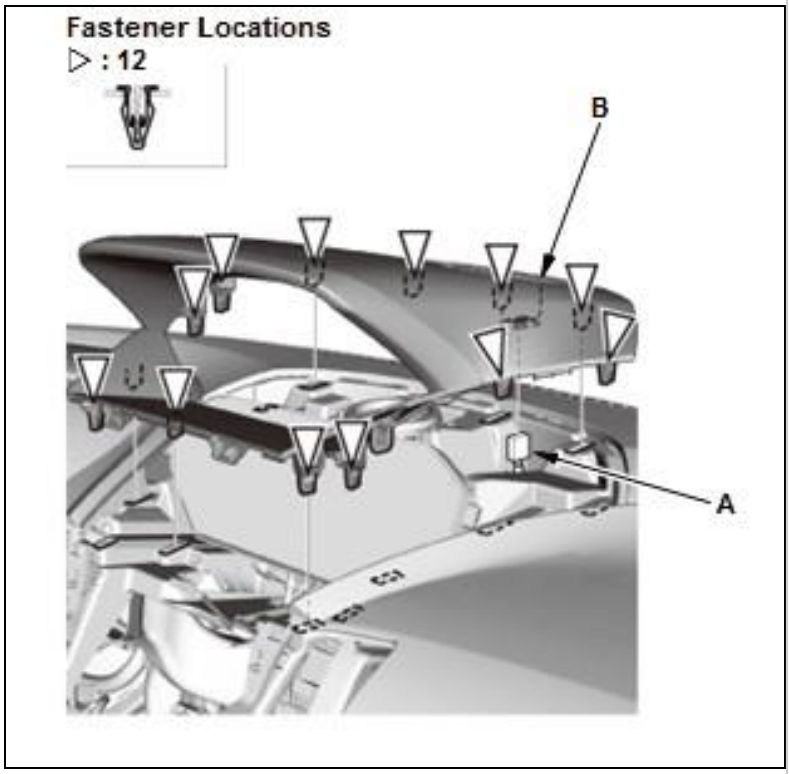

Courtesy of HONDA, U.S.A., INC.HONDA, U.S.A., INC.

3. Connect the automatic lighting/sunlight sensor connector (A)
4. Install the center display visor assembly (B).

With navigation

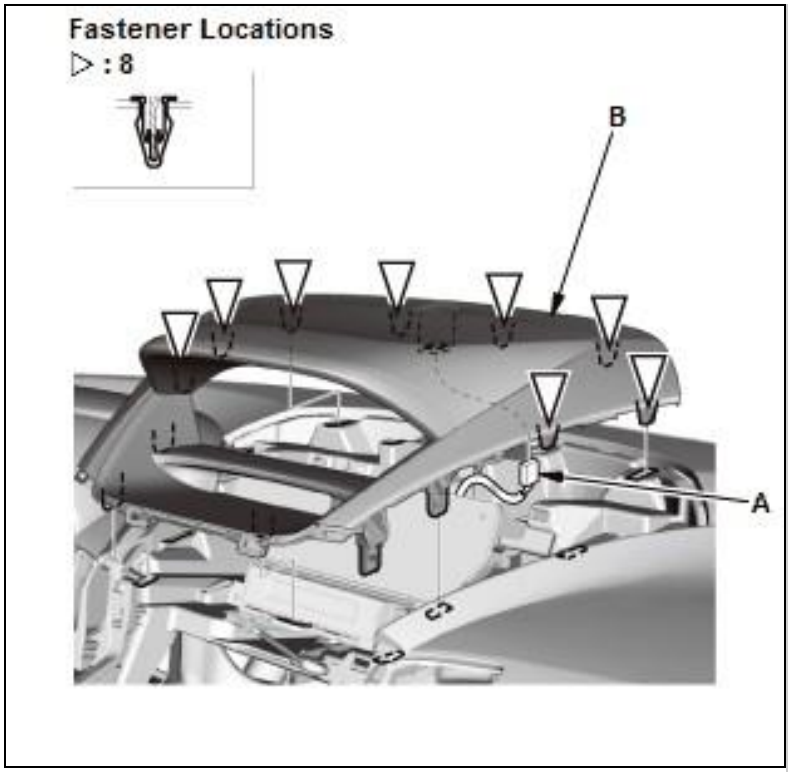

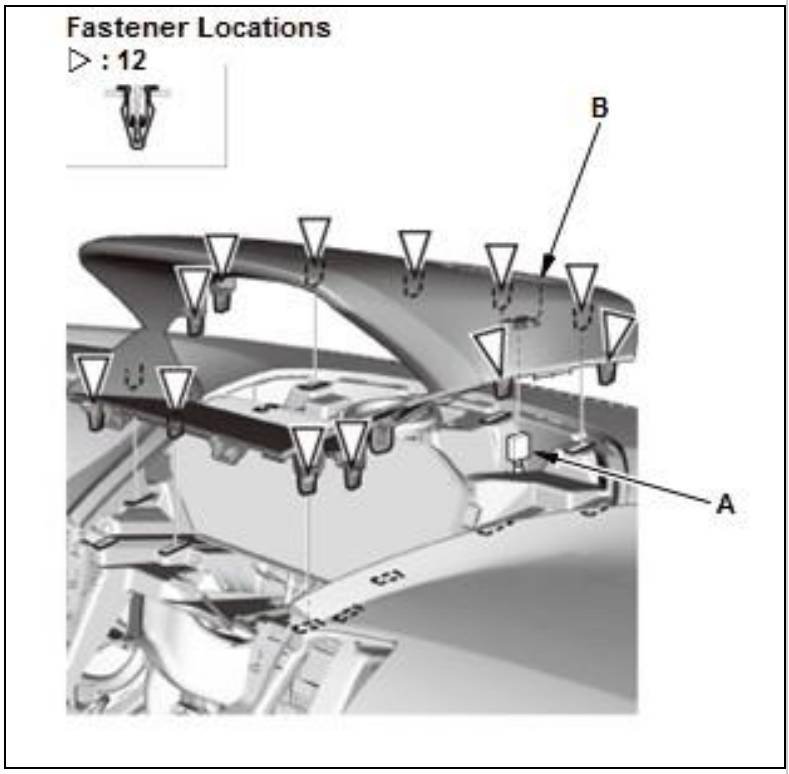

Courtesy of HONDA, U.S.A., INC.HONDA, U.S.A., INC.

1. Install the dashboard center panel:
    1. Without navigation
    2. With navigation - Refer to: Audio-Navigation Unit Removal and Installation (2013-15), or

Audio-Navigation Unit Removal and Installation (2016-18)

2. Dashboard Center Panel - Install