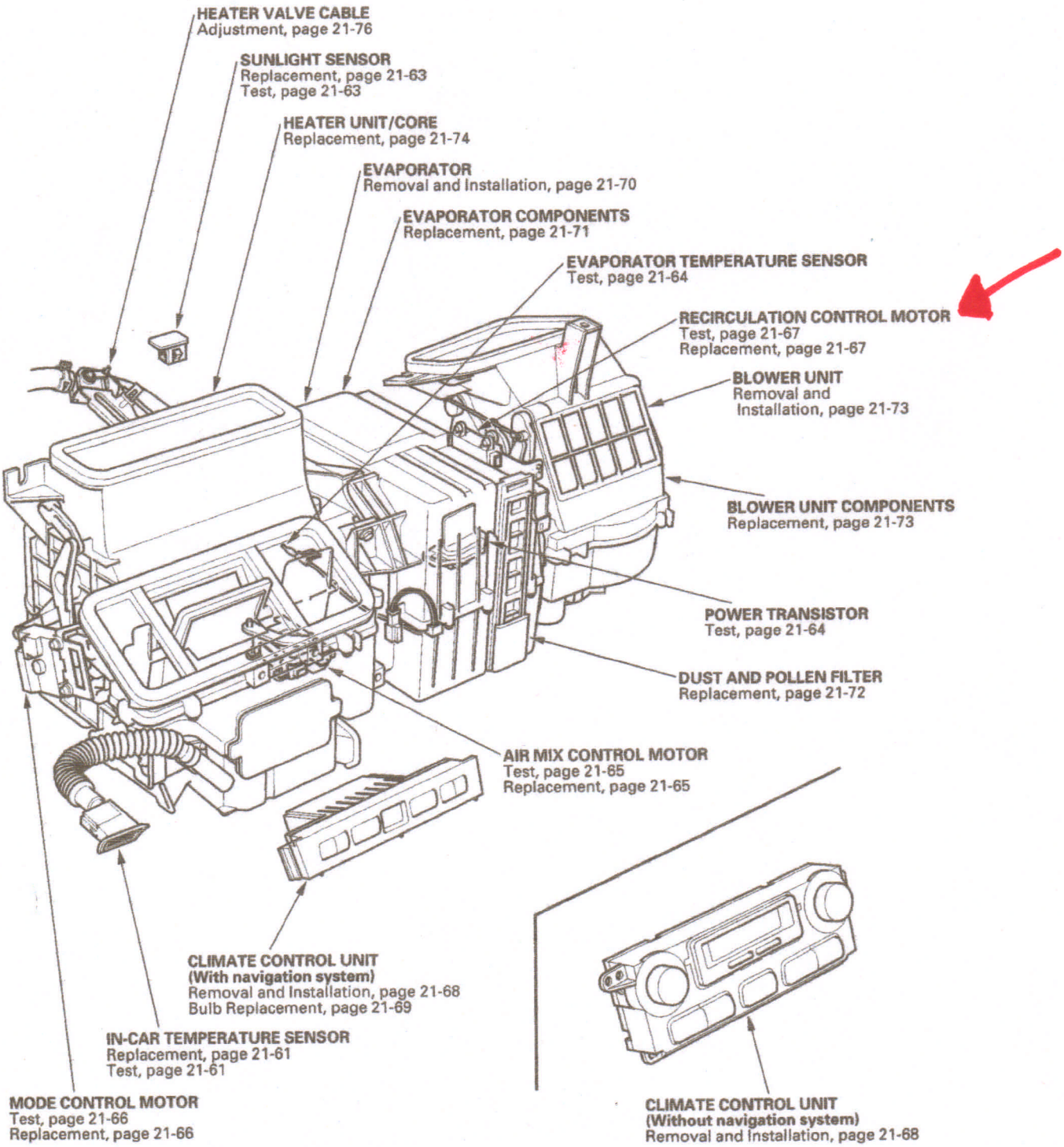Protected by AR