Circuit Diagram

USA

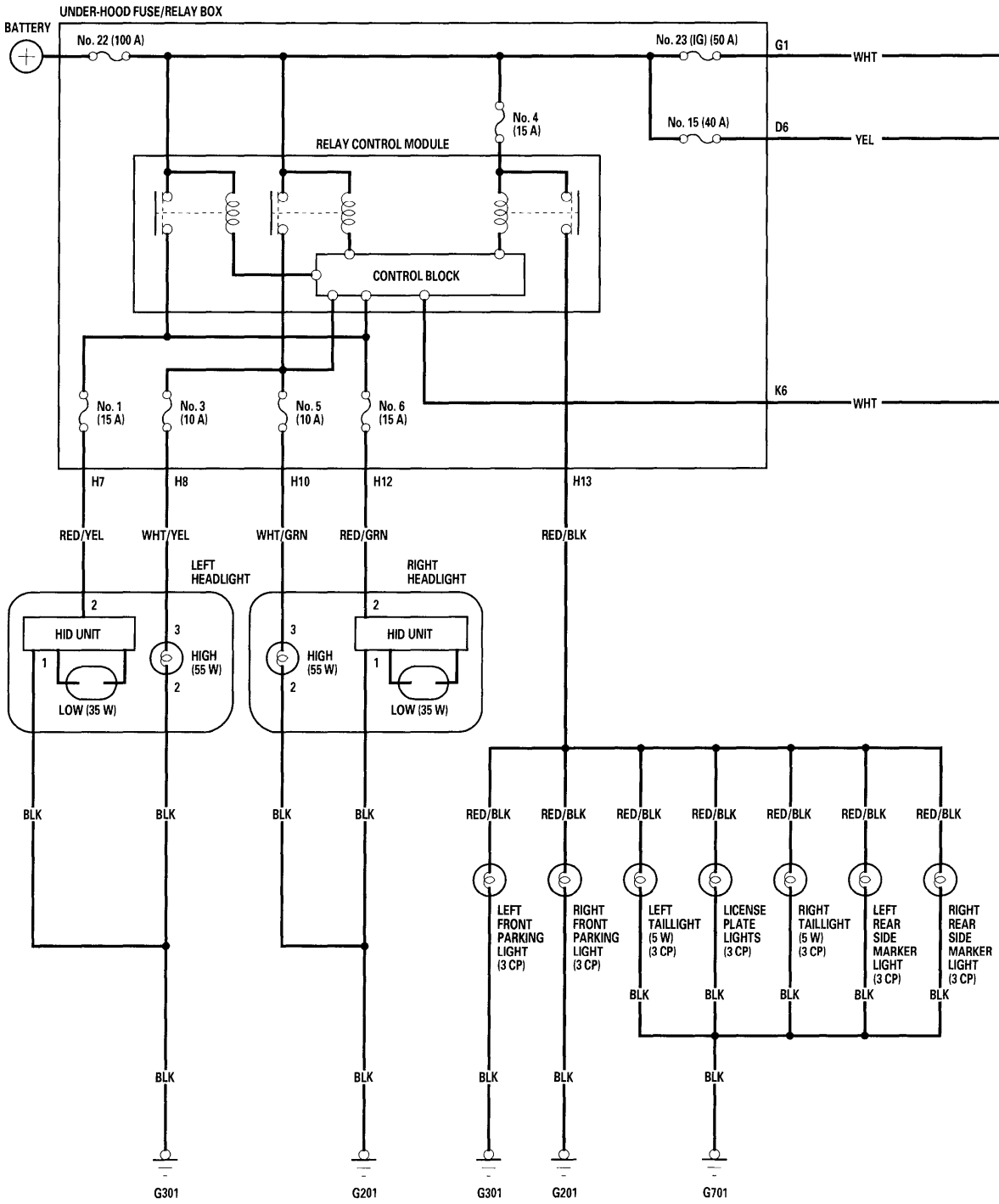

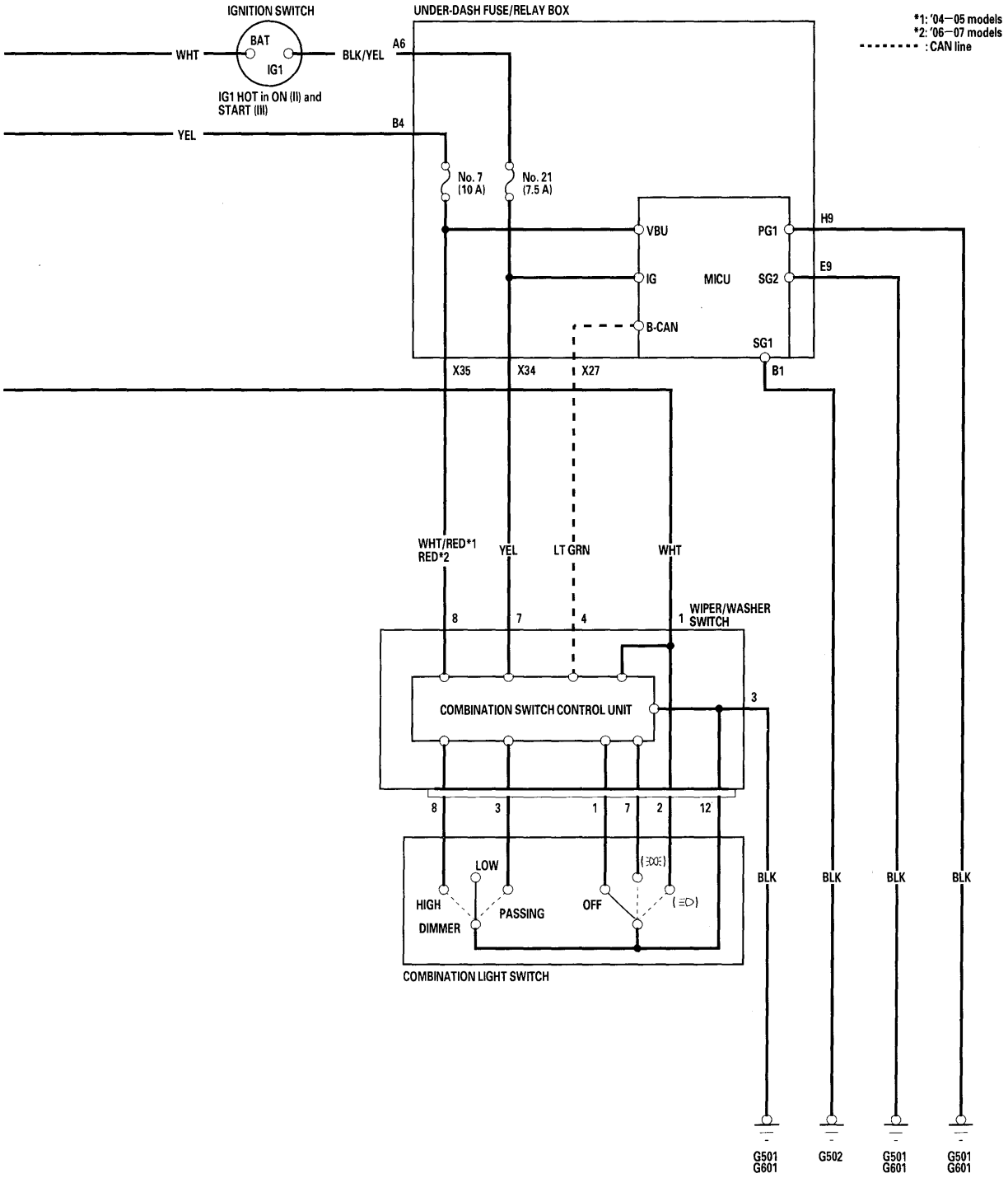
IGNITION SWITCH
BAT
IG1
WHT
BLK/YEL
IG1 HOT in ON (II) and START (III)
YEL
UNDER-DASH FUSE/RELAY BOX
A6
B4
No. 7 (10 A)
No. 21 (7.5 A)
VBU
IG
B-CAN
MICU
PG1
SG2
SG1
H9
E9
B1
X35
X34
X27
*1: '04—05 models
*2: '06—07 models
: CAN line
WHT/RED*1
RED*2
YEL
LT GRN
WHT
8
7
4
1
WIPER/WASHER SWITCH
COMBINATION SWITCH CONTROL UNIT
3
8
3
1
7
2
12
LOW
HIGH
PASSING
DIMMER
OFF
COMBINATION LIGHT SWITCH
BLK
BLK
BLK
BLK
G501
G601
G502
G501
G601
G501
G601