Circuit Diagram
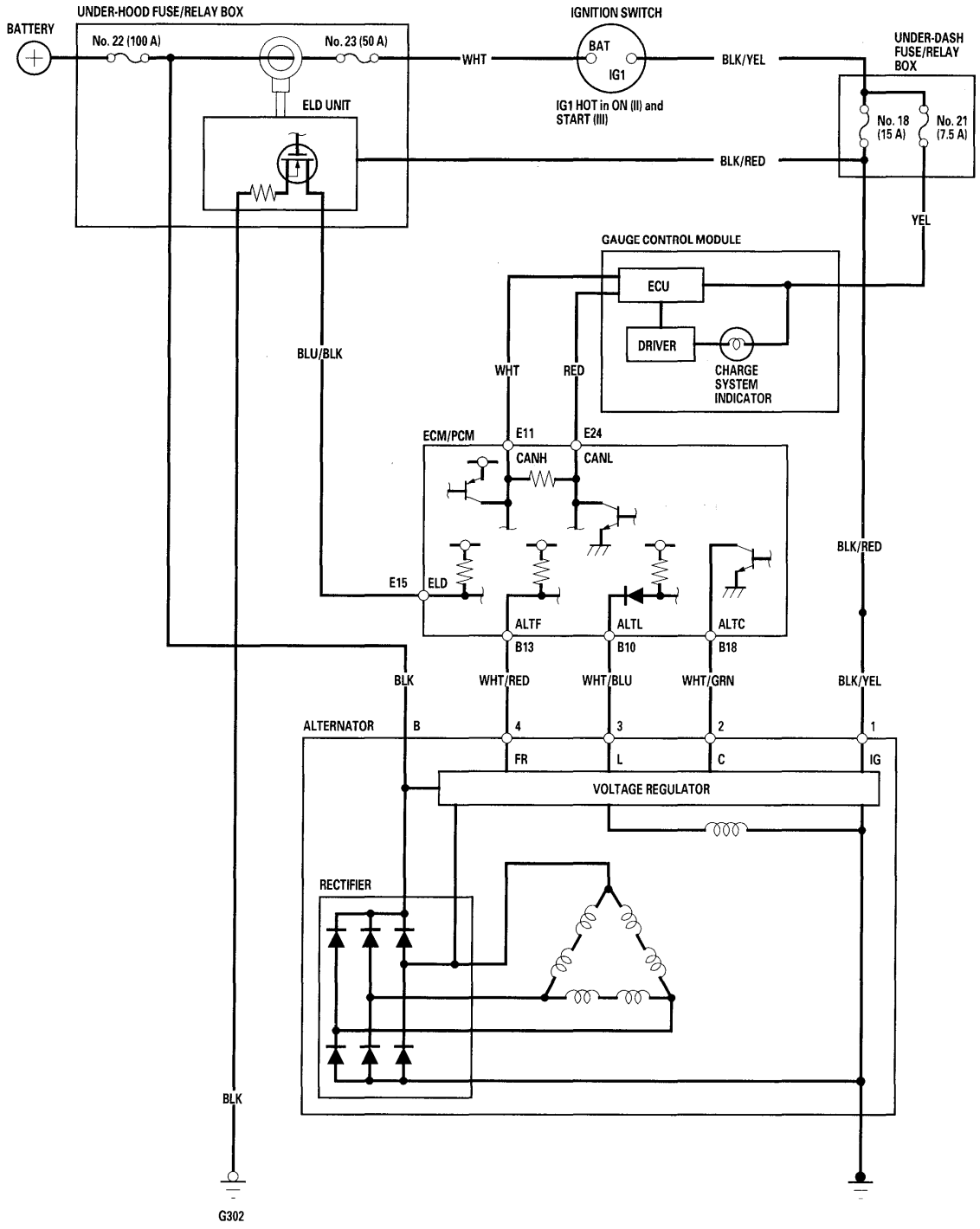
'04-05 Models